Snowtown Wind Farm Pty Ltd
ACN: 109 468 804

Mail Address:
GPO Box 1512
Adelaide
South Australia, 5001
www.trustpower.co.nz

Rontheo van Zyl
Mobile: +61 400 802 445
Email: rontheo.vanzyl@trustpower.com.au

18th April 2012

Wakefield Regional Council
PO Box 167
BALAKLAVA SA 5461

Attention: Dustin Guthberg

Snowtown Wind Farm Stage 2 and Associated Infrastructure – Application for Planning Variation

Dear Dustin,

INTRODUCTION

Following on from the Provisional Development Plan Consent granted in September 2010 in respect of an indicative layout for Stage 2 of the Snowtown Wind Farm, TrustPower Ltd, through its subsidiary Snowtown Wind Farm Pty Ltd seeks a variation to allow for the construction of the final confirmed Stage 2 layout, comprising the installation of wind turbine generators (ñ**WTGs**ò) at 90 of the remaining 101 approved WTG locations as well as the associated supporting civil and electrical infrastructure.

This letter is a formal application for a variation to the following Snowtown Wind Farm approvals:

- Provisional Development Plan Consent (Development Number 373/048/10); granted on 23rd September 2010 allowing for the installation of up to 102 WTGs and associated infrastructure, and various subsequent amendments granted on:
    - The 22nd November 2010 ï allowing for the installation of a single Suzlon S95 Prototype WTG;
    - The 27th January 2011 ï allowing for installation of five additional temporary wind monitoring masts;
    - The 19th September 2011 ï variation to condition 11 and a requirement to meet EPA tonality parameters at the receiver as opposed to a set distance of 500m from any WTG; and
    - The 6th November 2010 - allowing for time extension till 23 September 2014 for substantial commencement of the project.

A number of other approvals have also been obtained to facilitate the construction of Stage 2, including:

- Environmental Protection and Biodiversity Conservation (EPBC) referral decision dated 29th January 2010 ï decision confirmed proposed action is not a controlled action;
- Native Vegetation Council of South Australia ï decision dated 16th May 2011, approving clearance of vegetation for building or provision of infrastructure;

- Confirmation by Airservices Australia on the 25th January 2012 that the development will not adversely impact airline safety, airway facilities and instrument procedures; and
- Approvals from various affected stakeholders, including participating and neighboring landowners and heritage groups.

These approvals are discussed in more detail below.

BACKGROUND

TrustPower has spent a considerable amount of time and effort over the last 18 months concluding commercial negotiations with turbine suppliers, transmission line construction contractors, the network service provider, and electricity retailers to facilitate the construction of Stage 2 of the Snowtown Wind Farm.

The Snowtown Wind Farm development timeline to date is summarised as follows:

- *January 2004* ï Provisional Development Plan Consent approval granted for installation of 130 WTGs and associated infrastructure;
- *January 2007* ï construction of Stage 1 commenced (47 Suzlon S88 WTGs);
- *October 2008* ï Stage 1 construction completed and wind farm fully commissioned;
- *September 2010* ï Provisional Development Plan Consent granted for installation of a further 102 WTGs at the Snowtown Wind Farm site; and
- *August 2011* ï construction/installation of single Suzlon S95 prototype completed and WTG fully operational.

The proposed 270 MW Stage 2 expansion of the Snowtown Wind Farm represents a substantial investment in South Australiaôs Mid North region, and would take the total capital value of the completed Snowtown Wind Farm project (Including the existing Stage 1) to approximately $800m.

It will make the Snowtown Wind Farm one of the largest wind farms in the Southern Hemisphere, and will make a substantial contribution towards Australiaôs and South Australiaôs renewable energy generation targets of 20% by 2014 and 33% by 2020 respectively. Stage 2 of the Snowtown Wind Farm will produce approximately an additional 980 GWh of electricity each year, which is enough to power approximately 170,000 average South Australian homes. The completed total Snowtown Wind Farmôs electricity output will be equal to almost 10% of South Australiaôs current electricity generation. It will also contribute significantly to the Commonwealthôs emission reduction targets by saving more than 700,000 tonnes of greenhouse gas emissions annually.

It will have substantial direct and indirect benefits for the Mid North region, in terms of landowner royalty payments, construction jobs and ongoing economic activity associated with the wind farm, continuing and extending the benefits accrued by Stage 1.

TrustPower will also establish a separate ongoing community fund in respect of Stage 2, following on from the success of similar arrangements put in place for Stage 1.

PLANNING VARIATIONS SOUGHT

A number of minor variations are being sought to the Provisional Development Plan Consent 373/048/10 granted 23rd September 2010 (ï**Provisional DPC**ò) and subsequent variations. These include variations to:

- Reduce the number of WTGs from 101 to 90;
- The proposed final locations of the Stage 2 WTGs;
- The proposed final Stage 2 WTG model(s);
- The proposed final locations of the civil and electrical infrastructure;
- Flexibility in final locations of the Stage 2 WTGs and infrastructure to allow for minor adjustments following final detailed design and during construction;

- The installation of up to 10 temporary and permanent wind monitoring masts associated with Stage 2;
- Staging of construction works and associated Provisional Building Rules consents; and
- Extend the time by which the project must be substantially commenced.

These variations are described in detail below.

WTG Layout

The Provisional DPC approved the installation of 102 Suzlon S88 2.1MW model WTGs. In August 2011, TrustPower installed a single Suzlon S95 2.1MW prototype model WTG at one of these locations, as allowed for through a variation to the Provisional DPC granted on the 22nd November 2010, leaving 101 consented WTG positions remaining.

TrustPower proposes installing 90 WTGs located within a very similar footprint to those previously approved under Provisional Development Plan Consents 373/111/03, 373/139/04 and 373/048/10.

Changes in the final locations of the proposed Stage 2 WTGs are as a result of:

- The characteristics of the specific turbines proposed for Stage 2;
- The need to maintain appropriate turbine separation distances between Stage 1 turbines and proposed Stage 2 turbine locations;
- Various ecological, heritage, construction and other environmental constraints; and
- Improved understanding of the wind resource on site as a result of additional wind monitoring.

The proposed locations of the 90 Stage 2 WTGs are shown in Appendix A.

WTG Model

TrustPower proposes installing a combination of two different Siemens 3MW WTG models for Stage 2, consisting of 67 Siemens SWT-3.0-108 WTGs and 23 Siemens SWT-3.0-101 WTGs (90 in total). The location and model type of each WTG are shown on the plans provided in Appendix A.

The two Siemens turbine models are identical to each other in all respects with the exception of their rotor diameter, being 108 and 101m respectively. The WTGs represent the very latest in WTG technology. The Siemens direct-drive (no gearbox) turbine platform consists of a 3-bladed, horizontal-axis, upwind, variable-speed, pitch-regulated turbine, rated at 3.0MW electrical capacity. Both turbine models are expected to generate significantly more energy annually than the model considered for the Provisional DPC due to their larger rotor diameter and the increased electrical capacity of each turbine. Information on the SWT-3.0-101 WTG (same in all respects to the SWT-3.0-108 with the exception of rotor size) is provided in Appendix B.

This has considerably improved the project fundamentals and makes the most efficient and cost effective use of the available wind resource.

The key characteristics of each proposed WTG model compared to the existing WTGs and the model approved in the Provisional DPC are highlighted in table 1.

While the WTGs have a larger rotor diameter than the model proposed under the Provisional DPC, the overall increase in height (to the blade tip) for the SWT-3.0-101 and SWT-3.0-108 is only approximately 5% and 8% respectively, and therefore we expect the increased visual impact compared with the Suzlon S88 will not be significant.

The Prototype Suzlon S95 WTG approved and installed in August 2011 is also larger than the indicative WTG approved in the Provisional DPC and sets precedence for higher turbine tip heights on the site. The overall increase in height (to the blade tip) for the Stage 2 SWT-3.0-101 and SWT-3.0-108 WTGs when compared to the Prototype WTG model is only approximately 2% and 5% respectively.

There has also been a reasonable reduction in the number of WTGs proposed for Stage 2 from 101 to 90 (allowing for installation of the Prototype WTG).

WTG Model	Status	Development Number (Date)	Hub height (m above ground level)	Rotor Diameter (m)	Blade Tip Height (m above ground level)
Suzlon S88 2.1MW	Installed Stage 1	373/111/03 (07/12/2006)	80.0	88.0	124.0
Suzlon S88 2.1MW	Provisional DPC	373/048/10 (23/09/2010)	80.0	88.0	124.0
Suzlon S95 2.1MW	Installed Prototype	373/048/10 (22/11/2010)	80.0	95.0	127.5
Siemens SWT-3.0-101	Proposed variation	TBA	79.5	101.0	130.0
Siemens SWT-3.0-108	Proposed variation	TBA	79.5	108.0	133.5

Table 1: WTG Characteristics

Electrical and Civil Infrastructure

Amendments to the Provisional DPC are required to support minor alterations to the electrical and civil infrastructure associated with the wind farm development. These amendments include:

- Minor changes to the 33kV overhead and underground reticulation to support the changes in WTG locations and further discussions with affected landowners;
- Minor changes in access road alignment to support the changes in WTG locations and further discussions with affected landowners;
- Confirmation of the location of temporary site laydown and concrete batching plant areas required during construction; and
- In some specific locations, alternative options have been allowed for with respect to alignment of final 33kV overhead reticulation and access routes, and the final selected option will be confirmed prior to construction once on site investigations and detailed design have been completed.

The layout of the proposed electrical and civil infrastructure is shown on the plans provided in Appendix C.

Other than the proposed changes described above (and in this variation application), the remaining civil and electrical infrastructure for Stage 2 will be consistent in all other respects as approved under the Provisional DPC and subsequent variations.

The proposed final alignment of the overhead 33kV transmission infrastructure remains inside the 1km corridor approved in the Provisional DPC. The proposed final alignment of the 275kV transmission line is unchanged from that approved under the Provisional DPC.

Provision for Minor Adjustments in the Location of WTGs and Infrastructure

There is a possibility that following detailed geotechnical site investigations and design that unforeseen conditions may require minor adjustments to the final location of the WTGs and/or the civil and electrical infrastructure. It is therefore requested that movement of up to **50m** from the proposed locations of the WTGs and infrastructure as set out in this variation application is permitted without requiring a further variation to the Development Approval.

Any relocation of WTGs or infrastructure will only occur where:

- WTGs or infrastructure remain within the same participating wind farm landowners land parcels;

- Relocation will not result in adverse impacts or any variation to the environmental or heritage assessments and approvals; and
- Relocation will not result in non compliance with noise criteria or any other conditions under the final Development Approval granted.

As-built drawings and confirmed locations of all WTG positions and infrastructure will be provided to the Wakefield Regional Council as soon as these are available following construction completion.

Installation of Stage 2 Wind Monitoring Masts

Currently, there are seven temporary cylindrical, guyed meteorological masts installed on the wind farm site at various locations with a height between 50 and 70 m above ground level, and three 80m lattice masts (two permanent masts associated with Stage 1 and one associated with the Prototype WTG). The Provisional DPC extended the time for which some of these could remain installed. A variation to the Provisional DPC granted on the 27th January 2011 provided for the installation of five additional wind monitoring masts on the site. All temporary masts will be removed as construction activities commence in the vicinity of each mast location.

Ongoing monitoring associated with safe operation of Stage 2, as well as performance testing of the WTGs following construction will require the installation of up to ten 80m wind monitoring masts at various locations across the site, similar in appearance and scale to the existing permanent wind monitoring masts (two) associated with Stage 1. Some of the proposed wind monitoring masts will be removed following WTG performance testing, however it is anticipated that five will remain on a permanent basis, installed for the operating life of the wind farm. It is therefore requested that following final site investigation and design, TrustPower confirm with the Council which of the ten masts will be permanent, and which will only be installed for the duration of WTG performance testing (up to 18 months after WTG installation).

A map showing the locations of temporary, existing and proposed permanent wind monitoring masts, along with general specifications of the proposed masts are set out in Appendix D.

A minor variation to the Provisional DPC is therefore requested for the installation of up to ten additional wind monitoring masts, five of which will remain as permanent installations for the operating life of the WTGs.

Staging of Construction Works and Building Rules Consent

Due to the nature of the construction program and activities, and the desire to commence site works as soon as practical following contract award, the following provisions are requested in the final Provisional Development Plan Consent for this variation to provide for staging of the separate elements of the construction works:

- Those works which do not require Building Rules consent (in accordance with relevant building regulations codes and standards e.g. site mobilisation activities, establishing temporary staging areas and facilities, access road formation etc.) to commence construction as soon as practical following the issue of all other relevant consents/approvals, provided that all relevant conditions of such consents/approvals are first met in all respects (such as provision of the CEMP to the Wakefield Regional Council for approval).

- Those elements of works which do require Building Rules consent (in accordance with relevant building regulations codes and standard) to commence construction separately once Building Rules consent has been obtained for that element, provided that all other relevant consents/approvals have been satisfied. If Building Rules consent has not been obtained for some elements, this will not preclude construction works commencing in respect of those elements that have obtained Building Rules consent and all other relevant consents/approvals have been issued (where deemed appropriate by the Wakefield Regional Council).

It is expected the following project elements will require separate Building Rules consent and to secure separate full Development Approval to commence construction:

- WTG foundations;
- Equipment foundations (e.g. substation power transformers);
- Any on-site buildings such as offices and work-sheds associated with the operations and maintenance compound and on-site 275/33kV Barunga Gap substation;
- The 275kV transmission connection switching station (Blyth West);
- The 33kV on-site overhead transmission lines; and
- The 275 kV overhead transmission line.

TrustPower anticipates that three separate CEMP documents will be submitted to the Wakefield Regional Council for approval to reflect each contractual scope of work, namely:

1. The Stage 2 Engineer, Procure and Construct (ñ**EPC**ò) contract works ï this includes the installation of WTGs and all civil and electrical site works up to and including the wind farm 275/33kV Barunga Gap substation;
2. The 275kV transmission line between the Barunga Gap substation and the Blyth West switching station at the interface with the existing Para-Bungama 275kV transmission line; and
3. The proposed connection works at the point of interconnection with the Para-Bungama 275kV transmission line.

Each CEMP will also outline the proposed working schedule in respect of the works ï TrustPower anticipates a seven day a week construction schedule will be necessary throughout the construction program in order to meet construction milestones.

It is anticipated that all other construction activities will not require Building Rules consent, and therefore can commence at any time after receipt of the Provisional Development Plan Consent in respect of this variation application and the satisfaction of all relevant consent conditions.

Project Timing

TrustPower anticipates site works will commence during the second half of 2012. Stage 2 of the Snowtown Wind Farm is expected to take approximately two and half years to complete construction.

On the 6th November 2010, the Wakefield Regional Council approved (Appendix E) a three year extension to the date for substantial construction commencement from the 23rd September 2011 to the 23rd September 2014.

Although a schedule for construction has been agreed with the selected suppliers, TrustPower requests a period of three years from the date at which the proposed variation to the Provisional DPC is approved within which the Stage 2 development must be substantially commenced to accommodate any unforeseen issues beyond our control.

Besides the changes highlighted in this planning variation application, the detailed information in the original and subsequent planning applications still apply.

_____

DETAILED DEVELOPMENT CONSIDERATIONS

Ecology

Ecological Assessment

Detailed ecological assessments of the revised wind farm site and infrastructure corridors have been undertaken by the consultants Environment and Biodiversity Services (EBS) Pty Ltd, continuing on from assessments undertaken previously by EBS across the entire project area. EBSôs reports detailing the outcomes of these assessments are contained in Appendix F.

The findings of the ecological assessment are summarised as follows:

- Iron grass areas identified do not qualify as a critically endangered threatened ecological community under the EPBC Act;
- No nationally threatened flora species were detected during any surveys;
- Dominant vegetation across surveyed areas are cropped paddocks;
- No national or state conservation rated flora species were detected within the proposed transmission alignment;
- No reptile species of national conservation significance were detected;
- Out of 40 bird species recorded ruing the 2008 survey, one nationally significant and four State rare birds were recorded;
- Eleven Wedge-tailed Eagle nests identified, 3 were active across six survey periods;
- Six bat species were identified during 2008 survey;
- An EPBC referral in Jan 2010 found that the proposed action ôto develop stage two of the Snowtown Wind Farm and associated transmission line, near Snowtown, South Australiaô was deemed not a controlled action (EPBC 2009/5073). No additional follow-up surveys are required as the existing grasslands did not qualify as the listed community under the EPBC Act;
- It is unlikely that the proposed wind farm will impact on both the Pygmy Blue-tongue Lizard and the Flinders Worm-lizard, if they were both to occur on site; and
- Where a 300m buffer around Wedge-tailed Eagle nests and avoidance of key periods is unattainable, there is likely to be some level of impact toward the species.

The ecological assessments have enabled TrustPower to design a modified layout (WTGs and infrastructure) for Stage 2 which minimises the impacts of the wind farm upon local flora and fauna, and TrustPower have adopted the advice and recommendations of EBS wherever possible.

Significant effort has been made to maintain 300m buffer from identified Wedge-tailed Eagle nests (active and inactive) and WTGs wherever possible. Where this has not been achievable, TrustPower will undertake additional surveys and monitoring of active nests in accordance with the recommendations of the EBS report in order to ascertain the potential impact of construction activities. TrustPower will also endeavor where practical to program construction activities in the vicinity of active nests to avoid breeding season.

TrustPower will also adopt the majority of the recommendations in section 7 of the EBS report, including:

- Obtaining approvals from the Native Vegetation Council of South Australia in respect of the project;
- Implementing a 300m buffer around known Wedge-tailed Eagle nests wherever practical;
- Further monitoring of the breeding activity at known Wedge-tailed Eagle nest locations;
- Implementing best practice environmental management measures during any construction ï these will be detailed in the CEMP to be submitted to Council ahead of the commencement of site construction activities; and
- Endeavoring to minimise the construction footprint as far as practical.

Native Vegetation Council Approval

On the 16th May 2011, the Native Vegetation Council (ñ**NVC**ò) of South Australia advised that clearance for building or provision of infrastructure was approved subject to a number of conditions. A copy of this approval is attached at Appendix H. This approval was based on the same WTG and infrastructure layouts associated with the Provisional DPC.

A variation to the existing approval will be made to the NVC for any clearance of native vegetation associated with the final Stage 2 layout as provided with this application. Native vegetation impact has been minimised through careful design of the revised layout, and TrustPower will satisfy the requirements of the NVC by:

- Initially, attempting to negotiate a set aside area for a NVC endorsed native vegetation ñmanagement planò with a landowner of suitable land. Negotiations are well advanced with a landowner on a native vegetation management plan for native grasslands rotational grazing to satisfy the final NVC offset requirements.
- If a suitable set aside area cannot be negotiated successfully, the required Significant Environmental Benefit (SEB) payment will be made to the NVC for native vegetation protection in South Australia.

Environmental Protection and Biodiversity Conservation (EPBC)

An Environmental Protection and Biodiversity Conservation (ñ**EPBC**ò) referral was made for Stage 2 to the Commonwealth Department of Environment, Water, Heritage and the Arts. This determined that the Snowtown Wind Farm site and transmission line corridor are **not a controlled action**. The EPBC determination is contained at Appendix I.

Noise compliance

Detailed noise modeling has been undertaken by acoustical experts Sonus Pty Ltd for the revised proposed Stage 2 layout, and is contained in Appendix G.

The noise modeling for Stage 2 takes into account:

- the revised wind farm noise guidelines issued by the South Australian Environmental Protection Agency (ñ**SA EPA**") in July 2009 (http://www.epa.sa.gov.au/xstd_files/Noise/Guideline/windfarms.pdf);
- the noise profiles of the Stage 1, the Prototype WTG and proposed Stage 2 WTGs; and
- background noise modeling undertaken around the wind farm site in 2004 and 2009

As discussed in the noise report, the proposed Stage 2 layout is fully compliant with the SA EPA wind farm noise guidelines and concludes:

ñ*With the relevant noise criteria achieved, it is considered that the proposed wind farm has been located, sited and designed to avoid and minimise adverse noise, nuisance or hazard to nearby property owners/ occupiers by way of excessive noise. Therefore, it is considered that Council Wide Objective 2 and Council Wide Principle of Development Control 2 for renewable energy facilities are achieved with respect to noise.*ò

Formal advice was obtained from the Council on 6th November 2010 confirming EPA referral is not required for a variation to the Provisional DPC subject to TrustPower demonstrating compliance with the EPA wind farm guidelines and the Council being satisfied there will be no impact on adjoining residences.

It is noted that as a result of changes to the WTG layout, there are some WTGs in closer proximity to the ñHayesò residence than under the proposed Provisional DPC WTG layout, in particular WTGs 89 and 90. It has recently been confirmed that the Hayes residence is in fact a derelict dwelling and is not likely to be reoccupied ï the landowner has confirmed this and also provided a letter of no objection to the development and proposed layouts as evidenced by the endorsed layout plan attached at Appendix M

Civil Works and Cable Routes

Maps showing the locations of indicative access roads and electrical cable routes are contained in Appendix C. The proposed design specifications for the access roads and cable routes are consistent with the roads and cable routes installed in Stage 1 and approved in the original planning applications.

The proposed access roads are 5-6m in width, generally in accordance with the Environmental Statement in the original wind farm planning application. However, as was required for Stage 1, extra graded tracks and localised widening may be required in some locations, offset on either side of the formed access roads, to allow a crawler crane to traverse between WTG locations during construction. The width and offset of these graded tracks will depend on the type of crane which can be secured for the construction of Stage 2: a rubber tyred crane would require less graded width than a tracked ñcrawlerò crane, which is 9-10m across. Larger road widths are expected to be necessary at road bends, to accommodate the turning radius of the crane. At worst case, it is expected that the width of the overall graded area will not be in excess of approximately 10m. After construction is completed, the formed access road will remain for maintenance access and the graded areas of the offset tracks will be re-grassed. Any reinstatement or restoration of the site works will be in accordance with the relevant NVC application and decision documents.

Approval is requested for two alternative access track alignments proposed to access the site just north of Barunga Gap, as shown in Appendix C. Only one of these alternative tracks will be constructed and the final selected option will be confirmed prior to construction once on-site investigations and detailed design have been completed.

Heavy vehicle access to the site will be limited to the following roads in accordance with the Provisional DPC:

- Boundary Creek Road;
- Snowtown ï Bute Road; and
- Portion of Landslide Road (approximately 700m to the Barunga Gap substation and wind farm access).

Hardstands or wind turbine installation areas will also be constructed adjacent to each WTG location. The hardstand provides a level working surface for the cranes, and delivery and assembly of WTG components. Each hardstand area will be up to approximately 50 x 25m (1250m^2) consistent with the current (and anticipated variation) NVC approval. The final size and configuration of each hardstand will be determined following site geotechnical investigations and design taking into account relevant constraints (e.g. topographical, environmental and heritage constraints).

Indicative locations for temporary ñlaydownò construction compounds and on-site concrete batching plant areas are shown on the infrastructure maps in Appendix C. The locations are indicative representations only. The indicative dimensions of the two main laydown compounds along Boundary Creek and Bute-Snowtown (Barunga Gap) Roads are up to 100m x 100m. The indicative dimensions of the third laydown compound location close to proposed WTG 82 are up to 60m x 50m. Two alternative indicative locations are shown for the concrete batching plant (next to either one of the main laydown compounds proposed). The indicative dimensions of the concrete batching plant are up to 150m x 150m. Approval is requested for both alternative concrete batching plant location options proposed. Only one of the two optional concrete batching plants locations will be constructed. The final confirmed location for the concrete batching plant and exact locations of the laydown compounds will be provided to the Council prior to construction once on-site investigations and detailed design have been completed.

The cable routes for both the aerial and underground portions of the wind farm 33kV electrical reticulation system are generally in accordance with those proposed in the original planning application and the variation approved in September 2010 for electrical infrastructure.

The overhead 33kV lines are located within the corridor approved in the Provisional DPC. Where underground and overhead 33kV circuits are shown adjacent to each other, it is expected they will be co-located within the same easement corridors. The 33kV reticulation within the wind farm area will be underground and located generally in accordance with cable routes shown on the Proposed Stage 2 Infrastructure Layout maps in Appendix C. Final routes for the 33kV reticulation and access roads will be determined during in the detailed design stage following site investigations in consultation with the relevant landowners.

The proposed Stage 2 33kV overhead line will be located immediately adjacent to and on either the western or eastern side of the existing 33kV Stage 1 overhead line depending on final ground conditions and surveys.

Aboriginal Heritage

The wind farm site is located primarily on freehold land with no Native Title claims on the land.

The following actions have however been completed in respect of Aboriginal heritage matters associated with the Stage 2 development:

- Following desktop aboriginal heritage studies in early 2004, agreements were negotiated and signed in late 2004 with three Aboriginal groups: Narungga, Nukunu and Kaurna. Detailed aboriginal heritage surveys were conducted over the Stage 1 and indicative Stage 2 wind farm site with each group. Construction clearance was obtained for Stage 1 with agreed areas of aboriginal heritage sensitivity and exclusions identified.

- Following the addition of Maro Creek land to the wind farm project area, an aboriginal heritage survey of that land was conducted with all three Aboriginal groups in February 2009. No sites of particular aboriginal heritage significance were found during this survey.

- In 2011 further aboriginal surveys were conducted by all three Aboriginal Groups on the potential Stage 2 WTG and associated infrastructure not surveyed or cleared during the Stage 1 surveys.

Clearance to commence construction was obtained by all three Aboriginal Groups for Stage 2 infrastructure, with the following conditions:

- Agreement on a revised heritage sensitive area boundary and endorsed access track alignment around the Illawara Hill area;
- Discretionary construction monitoring to be conducted on selected Stage 2 areas; and
- Pre-construction artifact collection and surface test pits to determine extend of monitoring required at the terminal substation sites.

Copies of the Aboriginal Heritage surveys and constructions clearances for Stage 2 are provided in Appendix J.

During construction of Stage 1, extensive monitoring of on-site works was conducted by Aboriginal monitors. Such monitoring is proposed again for Stage 2, to ensure that areas of heritage sensitivity and significance are properly protected.

Discretionary Aboriginal heritage surveys will be conducted along:

- The overhead 275kV transmission line route once power pole locations have been selected and pegged;
- The terminal Barunga Gap and Blyth West wind farm substations; and
- Identified Stage 2 WTG locations not previously surveyed or identified as requiring monitoring during Stage 1 surveys.

Aboriginal surveys and construction works monitoring in Stage 2 are covered by existing agreements in place with the three Aboriginal groups.

Aviation Lighting and Safety

The changes to the WTG layout and model will have no adverse impact on aviation safety.The findings of the Aviation Lighting Review completed by HART aviation in September 2009 as submitted with the Provisional DPC application still apply, and it is considered that the installation of aviation lighting on the WTGs is not required.

In addition, Airservices Australia (ñ**ASA**ò) has subsequently completed a review of the proposed layout and impact on airline safety, airway facilities and instrument procedures. ASA concluded that the wind farm would have no affect on these matters, a copy of the ASA response and findings is attached at Appendix K.

Landowner Approvals

Directly affected landowner approvals in respect of the proposed development have been obtained and are evidenced by (as summarised in the list of affected titles in Appendix L):

- Wind farm landowners signoff on maps showing locations of all WTGs and associated civil and electrical infrastructure;
- Easement option agreements secured with landowners of non wind farm land in respect of the 33kV infrastructure;
- Easement option agreements secured with landowners in respect of the 275kV transmission line infrastructure;
- Signed confirmation from ML Hayes confirming the dwelling identified as ñHayesò on various maps and assessed under the Sonus noise report is derelict and the landowner does not object to the development (Appendix M);
- The land for the on-site 275/33kV substation at Barunga Gap has been purchased by Snowtown Wind Farm Pty Ltd; and
- Signed agreement for the purchase of the land for the 275kv transmission connection switching station (Blyth West).

Copies of the endorsed layouts and on-site 33kV easement options will be provided as separate supplementary information to this application.

_____

SUMMARY

Stage 2 of the Snowtown Wind Farm represents a substantial investment in South Australiaôs Mid North region, and would lead to ongoing direct and indirect benefits to the Mid North and its communities, in terms of landowner royalty payments, construction jobs and ongoing economic activity associated with the wind farm. It will make a substantial contribution towards Australiaôs and South Australiaôrenewable energy generation targets of 20% by 2014 and 33% by 2020 respectively. It would have substantial direct and indirect benefits for the Mid North.

TrustPower respectfully requests that the variations outlined in this document are treated as minor variations to the Provisional DPC for the following reasons:

- There is an overall reduction in number of WTGs from 101 to 90;
- WTGs and infrastructure are located within the same general footprint and on the same landowner titles as previous applications and approvals;
- the revised development continues to meets all relevant requirements including those of the EPA (noise), EPBC, NVC and aviation safety;
- The proposed layout variation does not vary significantly from the current Provisional DPC for Stage 2, which was subject to full Category 3 public notification;
- No objections were submitted during the public consultation periods for the original Snowtown Wind Farm development application and the subsequent Stage 2 variation;
- The development has been endorsed by all directly affected landowners; and
- The development is consistent with and complimentary to existing land use activities in the area.

We would be most grateful for your prompt consideration of these minor variations, to allow us to conclude commercial arrangements required to implement the project.

Regards

Rontheo Van Zyl
Wind Generation Development Manager

APPENDICES:

A. Proposed Snowtown Wind Farm Stage 2 Layout Maps and WTG Coordinates
B. Siemens SWT-3.0-101 and SWT-3.0-108 Wind Turbine Information
C. Proposed Stage 2 Infrastructure Layout
D. Wind Monitoring Mast Locations and Information
E. Wakefield Regional Council Letters - Extension of Time and EPA referral
F. Ecological Assessment Report - Wind Farm (Environment and Biodiversity Services Pty Ltd)
G. Environmental Noise Assessment Report (Sonus Pty Ltd)
H. Native Vegetation Council Approval
I. Environmental Protection and Biodiversity Conservation (EPBC) Referral Decision
J. Heritage Surveys
K. Airservices Australia Advice
L. List of Affected Titles
M. Hayes Consent

APPENDIX A

PROPOSED SNOWTOWN WIND FARM
STAGE 2 WTG LAYOUT MAPS

Proposed Stage 2 Infrastructure Layout

TrustPower

Legend

- St2 WTG Location (SWT-3.0-108)
- St2 WTG Location (SWT-3.0-101)
- Constructed Stage 1 WTG Location
- Existing Prototype WTG
- Proposed St 2 Underground Cable
- Provisional DPC Access Tracks
- Provisional DPC Overhead & Cable Layout
- Proposed St 2 Overhead Line - Single Circuit
- Proposed St 2 Overhead Line - Double Circuit
- Proposed St 2 Roads
- Exisiting Roads
- Landowner Boundries
- Proposed_Laydown_Area
- Proposed_Concrete_Batching_Plant
- Dwellings

Snowtown Stage 2 Variation Layout with Current Provisional DPC (Sep 2010 Layout)

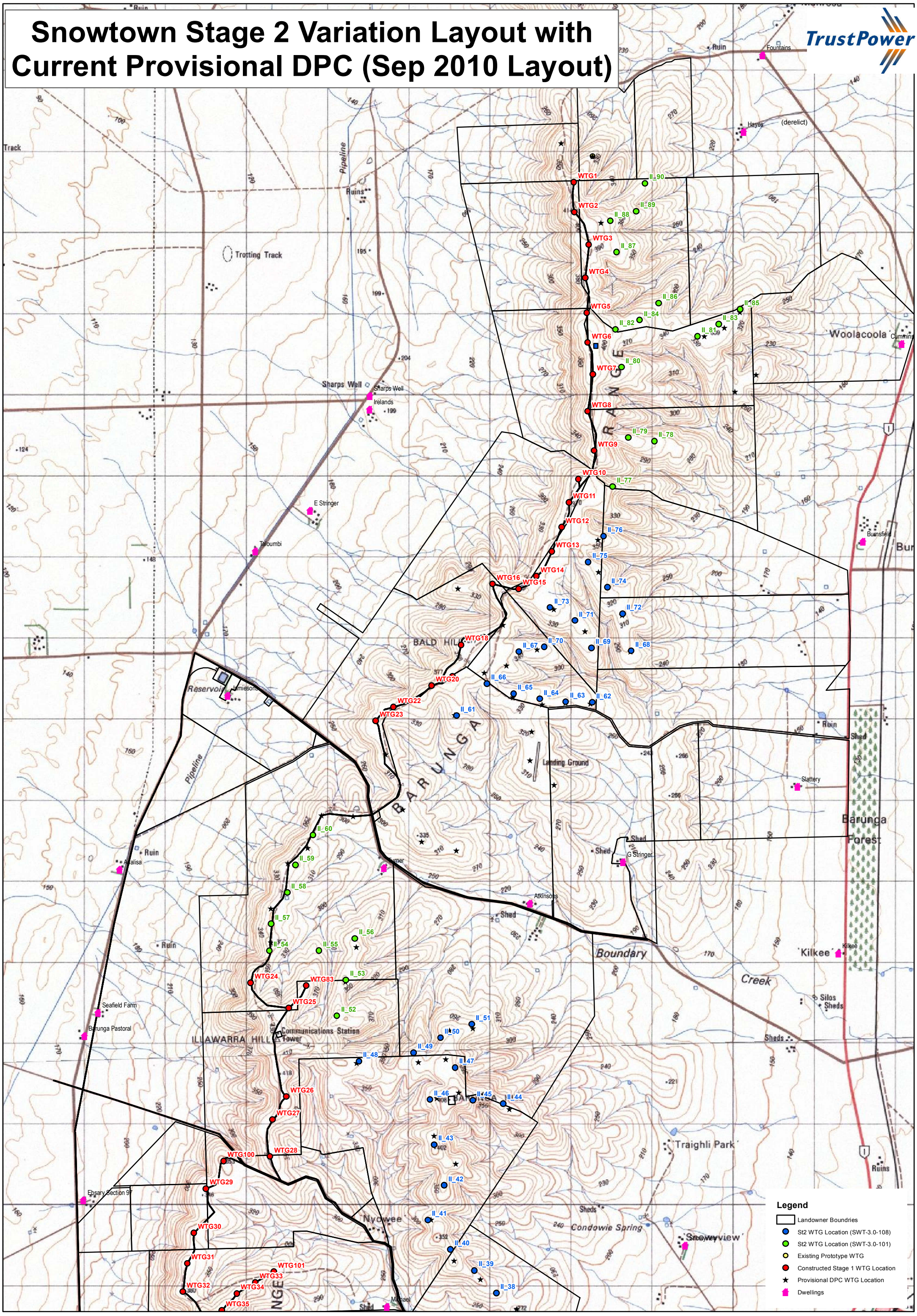

Snowtown Stage 2 Variation Layout with Current Provisional DPC (Sep 2010 Layout)

TrustPower

Legend
- Landowner Boundries
- St2 WTG Location (SWT-3.0-108)
- St2 WTG Location (SWT-3.0-101)
- Existing Prototype WTG
- Constructed Stage 1 WTG Location
- Provisional DPC WTG Location
- Dwellings

Snowtown Stage 2 Variation Layout with Original Approved (Jan 2004) Layout

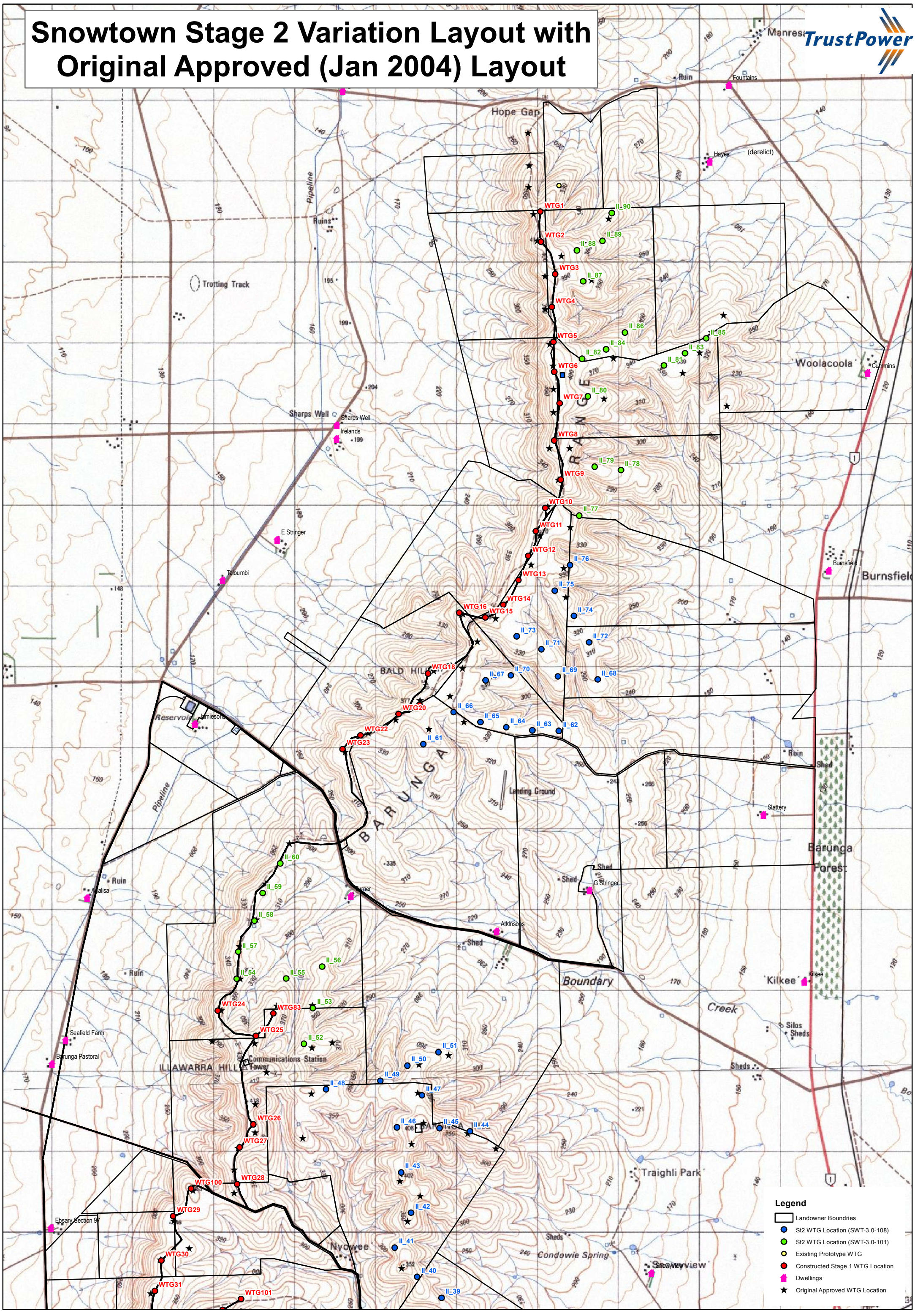

Snowtown Stage 2 Variation Layout with Original Approved (Jan 2004) Layout

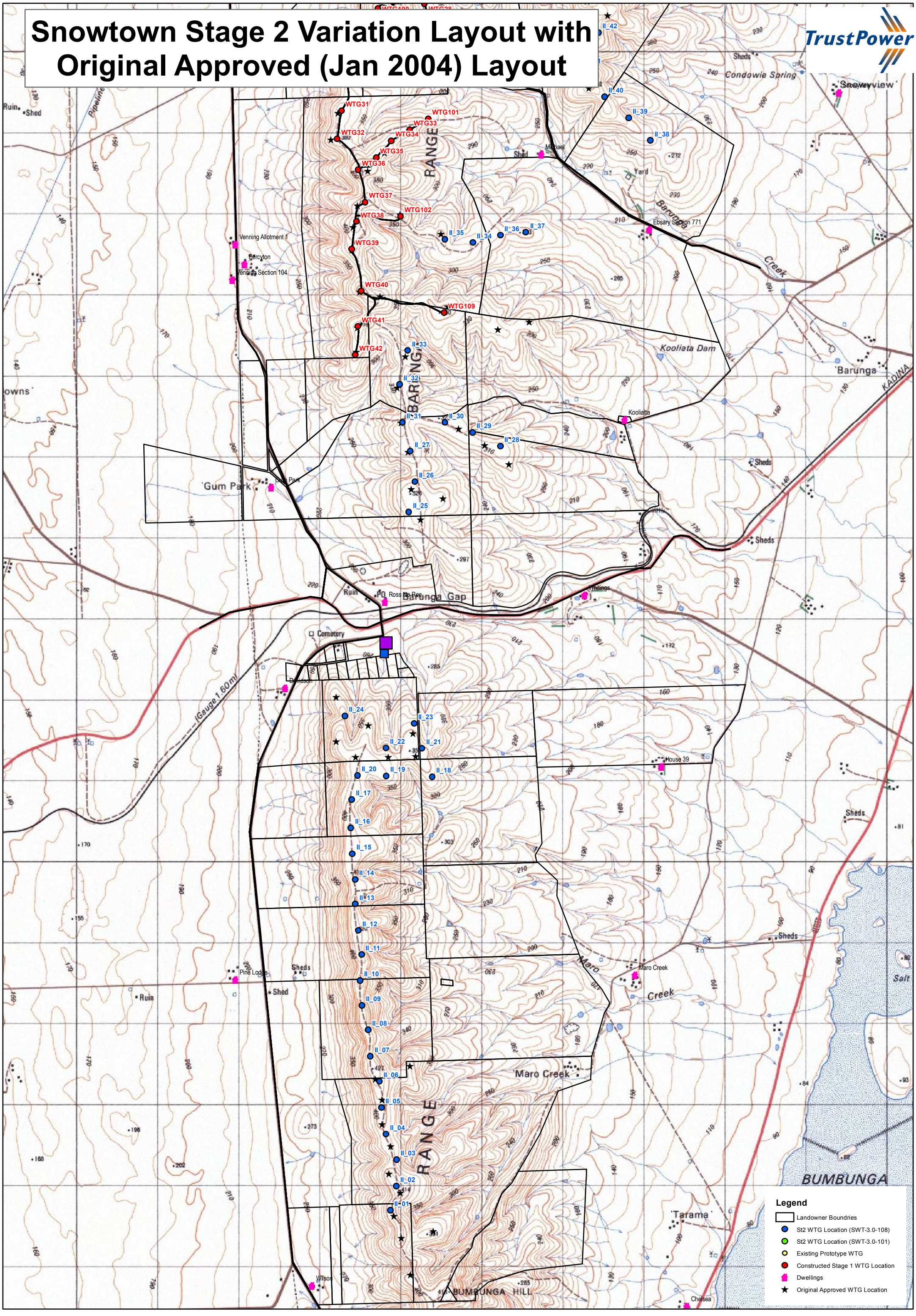

APPENDIX B

SIEMENS SWT-3.0-101 and SWT-3.0-108 WIND TURBINE INFORMATION

SIEMENS

Bright outlook for improved profitability

Direct drive wind turbine SWT-3.0-101

www.siemens.com/wind

Answers for energy.

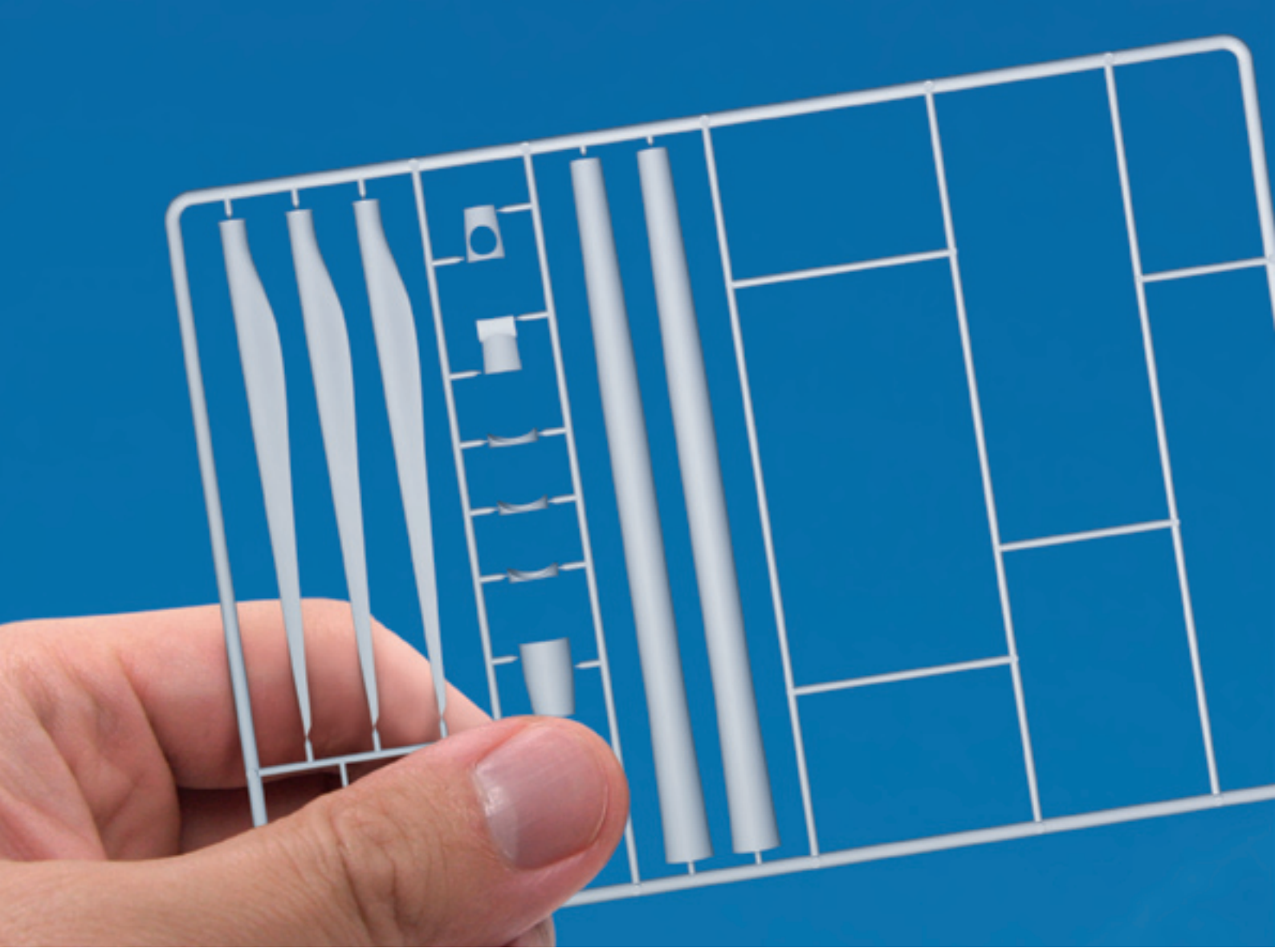

How can you gain maximum performance with 50 percent fewer parts?

As wind power plants develop capacities similar to conventional power plants, power generation companies throughout the world are striving for greater efficiency and cost-effectiveness.

Siemens' solution: increase availability and profitability through innovative technology.

The SWT-3.0-101 wind turbine from Siemens offers innovation through a completely new generator. With half the parts of a conventional geared turbine, and much less than half the number of moving parts, the new wind turbine is easy to maintain and extremely reliable. The compact design allows for cost-effective transportation on standard vehicles within most markets.

"Fewer components, increased profitability! What once was only a dream is now ready for serial production. Comprehensive testing has shown that the new direct drive wind turbine is a reliable investment in the future of power generation."

Henrik Stiesdal,
CTO, Siemens Wind Power

Performance and profitability go hand in hand

In designing a wind turbine, a holistic view of the design and construction, materials, processes, manufacture, and installation is critical. With the SWT-3.0-101, Siemens started with the ambitious aim of reducing the number of components by half, while increasing performance. Thanks to innovative engineering, that vision is now a reality.

The gearless SWT-3.0-101 carefully balances all these factors in a compact system that has the potential to significantly lower maintenance costs and service time.

Reduced complexity
Regardless of how reliable Siemens' wind turbine gearboxes have been in the past, the gearbox is always the most complex component of a wind turbine. Eliminating the gearbox reduces complexity and increases reliability.

Siemens has opted for a permanent magnet generator for improved efficiency. Unlike an electrically excited machine with a gearbox, a permanent magnet excited machine does not expend any energy on the excitation itself.

The SWT-3.0-101 also has an outer rotor, where the rotor spins on the outside of the stator. This design feature allows the rotor to operate within narrower tolerances, which aids in keeping the dimensions of the nacelle compact.

Simplified design
Despite the compact design, Siemens has actually given service technicians more space in which to operate. The drastic reduction of parts has created a relatively spacious environment within the nacelle, where key components are readily accessible. The "plug and play" nature of components allows most components to be interchanged without impacting other components.

The top-mounted, passive cooling system improves energy efficiency. The SWT-3.0-101 has a dual cooling system that provides an even cooling of the generator. The coolant life expectancy is also increased, aiding both reliability and performance.

Of the five key components in a wind turbine – the blade, rotor hub, nacelle, tower, and controller – all but the nacelle are adopted from the existing Siemens' portfolio. By utilizing proven components, Siemens has endeavored to eliminate many of the variables traditionally associated with the introduction of such an innovative product.

Ease of transportation and erection
The nacelle has a length of 6.8 meters and a diameter of 4.2 meters. Weighing 73 tons, the SWT-3.0-101 machine is "light" enough to be carried on trucks commonly available in most major markets.

The dimensions of the new wind turbine allow for greater flexibility in road transportation. Key bridge and tunnel clearance specifications have been carefully considered when engineering the machine, and as a result, the 3.0 MW wind turbine can navigate many of the most demanding transport routes.

One clear advantage of the new nacelle's size is that the nacelle is transported in one piece to minimize expensive and risky on-site assembly of critical components.

The compact system design, with a reduced number of rotating wear parts, is an ideal basis for profitable deployment onshore, offshore, and in coastal areas.

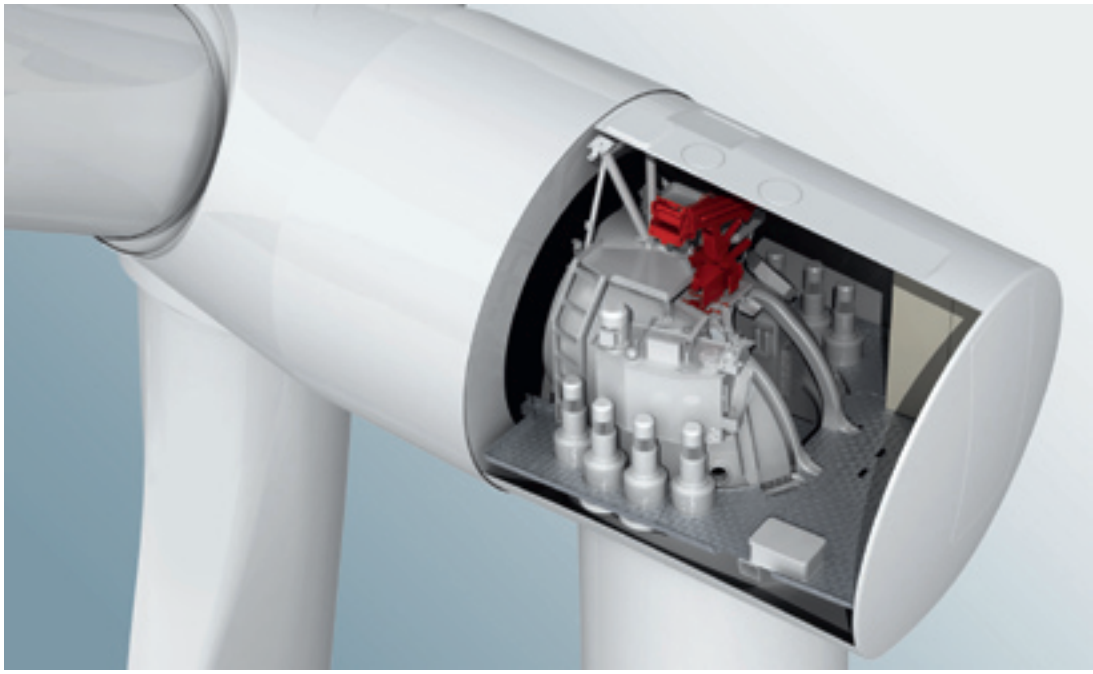

A new definition of competence: fully developed technology, advanced design

Grid performance with NetConverter®
Grid stability requirements grow as more wind power is fed into the grid, and Siemens sets the standard in the field of grid compliance.

Power conversion is implemented by the Siemens' NetConverter® system. This system is characterized by full conversion of the power generated, efficiently decoupling generator and turbine dynamics from the grid.

The NetConverter® system can offer maximum flexibility in the turbine response to voltage and frequency control, fault ride-through, and output adjustment. As a result, Siemens wind turbines can be configured to comply with a variety of relevant grid codes in major markets and can be readily connected to the grid.

Siemens IntegralBlade®
The rotors of the SWT-3.0-101 are manufactured using patented IntegralBlade® technology. The blades are made in one piece from fiberglass-reinforced epoxy resin in a single production step. As a result, there are no glue joints, that may become weak points potentially exposing the structure to cracking, water ingress and lightning.

Efficient lightning protection
The SWT-3.0-101 has efficient lightning protection. Its overall basic construction is based on the international standard IEC 61400-24 Lightning Protection Level I.

Key features at a glance	Technical data	
• New drive train design with permanent magnet generator is a technological leap forward • Simple design with less moving parts reduces complexity and need for maintenance • The compact and lightweight design is a major advantage for transportation and installation	IEC Class	IA
	Rotor diameter	101 m
	Blade length	49 m
	Swept area	8,000 m^2
	Hub height	80 m
	Power regulation	pitch regulated
	Annual output at 8.5 m/s	12,400 MWh
	Blade weight	10.3 t
	Nacelle weight	73 t
	79.5 m tower weight	162 t

Published by and copyright © 2011:
Siemens AG
Energy Sector
Freyeslebenstrasse 1
91058 Erlangen, Germany

Siemens Wind Power A/S
Borupvej 16
7330 Brande, Denmark
www.siemens.com/wind

For more information, please contact
our Customer Support Center.
Phone: +49 180 524 70 00
Fax: +49 180 524 24 71
(Charges depending on provider)
E-mail: support.energy@siemens.com

Renewable Energy Division
Order No. E50001-W310-A161-V2-4A00
Printed in Germany
Dispo 34804 c4bs No. 7491
fb 3942 WÜ WS 05115.

Printed on elementary chlorine-free
bleached paper.

APPENDIX C

PROPOSED INDICATIVE STAGE 2 INFRASTRUCTURE LAYOUT

All Proposed Stage 2 Infrastructure

TrustPower

Hope Gap
Ruin
Fountains
A Stringer
Pipeline
Ruins
Trotting Track
Sharps Well
Irelands
E Stringer
Taloumbi
Hayes
(derelict)
Woolacoo
Burnsfield
Ruin
Shed
Landing Ground
Shed
Shed
G Stringer
Atkinsons
Shed
Turner

COLLINSFIELD PTY LTD
CT5444/831

COLLINSFIELD PTY LTD
CT5444/866

A K & B M STRINGER
CT5230/634

BIPASS PTY LTD
CT5967/713

COLLINSFIELD PTY LTD
CT5967/714

MJ & JEJ & SR CUMMINS
CT5967/720

JEJ & SR CUMMINS
CT5967/715

JEJ & SR CUMMINS
CT5967/712

BIPASS PTY LTD
CT5967/710

JEJ & SR CUMMINS
CT5967/711

M P & R M SLATTERY
CT6018/124

M A DOLLING
CT5967/721

M P & R M H SLATTERY
CT6018/124

M A DOLLING
CT5869/964

BALD HILL

SEAFIELD FARM PTY LTD
CT6020/21

SEAFIELD FARM PTY LTD
CT6020/21

JAMIESON
CT5415/264

DAVID BIGG NOMINEES PTY LED
CT5623/683

MS & RJ JAMIESON
CT6024/317

SNOWTOWN WIND FARM PTY LTD
CT5990/693

SA WATER CORP
CT5973/443

M I & T M ATKINSON
CT6068/671

BIGG & SONS PTY LTD
CT5882/940

RAYMOND CHARLES ATKINSON AND MARY ELIZABETH ATKINSON
CT6068/675-678

G K & N G STRINGER
CT6002/808

R P & B K TURNER
CT6020/19

D T L STRINGER
CT6002/809

R D WEHR NOMINEES PTY LTD
CT5361/645

BARUNGA RANGE

Legend

- Landowner Boundries
- St2 WTG Location (SWT-3.0-108)
- St2 WTG Location (SWT-3.0-101)
- Existing Prototype WTG
- Proposed St 2 Underground Cable
- Provisional DPC Access Tracks
- Provisional DPC Overhead & Cable Layout
- Proposed St 2 Overhead Line - Single Circuit
- Proposed St 2 Overhead Line - Double Circuit
- Proposed St 2 Roads
- Constructed Stage 1 WTG Location
- Wind_Farm_Landowner_BoundriesDavidson_28Mrch2012
- 275kV Transmission Line
- Proposed_Laydown_Area
- Proposed_Concrete_Batching_Plant
- Exisiting Roads

Proposed Stage 2 Infrastructure Layout

TrustPower

JG JAMIESON
CT5986/853
JG JAMIESON
CT5415/264
Jamiesons
MS & RJ JAMIESON
CT6024/317
SNOWTOWN WIND FARM PTY LTD
CT5990/693
SA WATER CORP
CT5973/443
SEAFIELD FARM PTY LTD
CT6020/21
SEAFIELD FARM PTY LTD
CT6020/21
P & R M H SLATTERY
CT6018/124
M A DOLLIN
CT5869/96
DAVID BIGG NOMINEES PTY LED
CT5623/683
K C & M L & R J PRATT, KM COOPER
CT5178/484
Slattery
BIGG & SONS PTY LTD
CT5882/940
Landing Ground
M I & T M ATKINSON
CT6068/671
RAYMOND CHARLES ATKINSON AND MARY ELIZABETH ATKINSON
CT6068/675-678
G K & N G STRINGER
CT6002/808
Shed
G Stringer
D T L STRINGER
CT6002/809
Ruin
Analisa
R P & B K TURNER
CT6020/19
Atkinsons
Shed
Ruin
Boundary
Kilkee
Creek
R D WEHR NOMINEES PTY LTD
CT5361/645
Seafield Farm
Barunga Pastoral
AUSTRALIAN & OVERSEAS TELE CORP
CT5723/505
HANSEN CO PTY LTD
CT6018/598
MINISTER FOR ENVIRONMENT & CONSERVATION
CR5968/217
Sheds
HANSEN CO PTY LTD
CT5968/39
Traighli Park
P J & K L EBSARY
CT6073/758
HANSEN CO PTY LTD
CT5354/383
Ebsary Section 97
P J & KL EBSARY
CT5546/244
P J & K L EBSARY
CT6016/452
HM CROSBY
CT5483/458
HANSEN CO PTY LTD
CT5146/831
Sheds
Condowie Spring
Snowyview
Snowyview
Shed
Michael
R P TURNER
CT5423/427
Yard
N S & S D MICHAEL
CT6012/701
Barunga
Ebsary Section 771
Venning Allotment 1
Bercyton
Venning Section 104
P J & K L EBSARY
CT5581/927
Creek
Kooliata Dam
ROSS-NA-REE PTY LTD
CT5953/941
KOOLYATTA PASTORAL CO LTD
CT5245/346
Barunga
KADINA - BRINKWORTH RAILWAY
ROSS-NA-REE PTY LTD
CT5357/858
ROSS-NA-REE PTY LTD
CT5357/858
KOOLYATTA PASTORAL CO LTD
CT5245/347
GA & BM JORDANS
CT5149/834
ROSS-NA-REE PTY LTD
CT5572/984
ROSS-NA-REE PTY LTD
CT5357/858
ROSS-NA-REE PTY LTD
CT5953/941
A D WEHR NOMINEES PTY LTD
CT5831/596
Golf Park
ROSS-NA-REE PTY LTD
CT5158/266
Sheds
ROSS-NA-REE PTY LTD
CT5953/941
A D WEHR NOMINEES PTY LTD
CT5831/596
Sheds

Legend

- St2 WTG Location (SWT-3.0-108)
- St2 WTG Location (SWT-3.0-101)
- Constructed Stage 1 WTG Location
- Existing Prototype WTG
- Proposed St 2 Underground Cable
- Provisional DPC Access Tracks
- Provisional DPC Overhead & Cable Layout
- Proposed St 2 Overhead Line - Single Circuit
- Proposed St 2 Overhead Line - Double Circuit
- Proposed St 2 Roads
- Exisiting Roads
- Landowner Boundries
- Proposed_Laydown_Area
- Proposed_Concrete_Batching_Plant
- Dwellings

Proposed Stage 2 Infrastructure Layout

TrustPower

R P TURNER
CT5423/427

N S & S D MICHAEL
CT6012/701

P J & K L EBSARY
CT5581/927

ROSS-NA-REE PTY LTD
CT5953/941

KOOLYATTA PASTORAL CO LTD
CT5245/346

ROSS-NA-REE PTY LTD
CT5357/858

ROSS-NA-REE PTY LTD
CT5357/858

ROSS-NA-REE PTY LTD
CT5357/857

GA & BM JORDANS
CT5149/834

KOOLYATTA PASTORAL CO LTD
CT5245/347

ROSS-NA-REE PTY LTD
CT5572/994

ROSS-NA-REE PTY LTD
CT5953/941

ROSS-NA-REE PTY LTD
CT5357/858

A D WEHR NOMINEES PTY LTD
CT5831/596

ROSS-NA-REE PTY LTD
CT5158/266

ROSS-NA-REE PTY LTD
CT5158/266

Only one of these proposed roads will be constructed

ROSS-NA-REE PTY LTD
CT5953/941

A D WEHR NOMINEES PTY LTD
CT5831/596

Road To Be Closed

D J Davidson

D J Davidson

D J Davidson

D J Davidson

D J Davidson

D J Davidson

D J Davidson

D J DAVIDSON
CT5567/463

MARO CREEK PTY LTD
CT5177/737

MARO CREEK PTY LTD
CT5177/737

MARO CREEK PTY LTD
CT5803/881

MARO CREEK PTY LTD
CT5819/564

MARO CREEK PTY LTD
CT5674/787

MARO CREEK PTY LTD
CT5803/881

MARO CREEK PTY LTD
CT5674/788

MARO CREEK PTY LTD
CT5803/882

MARO CREEK PTY LTD
CT6077/389

MARO CREEK PTY LTD
CT6077/390

MARO CREEK PTY LTD
CT5814/490

D W & M J HENDERSON
CT5964/291

DW & MJ HENDERSON
CT5964/291

G R & F WILSON
CT5784/780

G R & F WILSON
CT5376/727

G R & F WILSON
CT5376/728

MINISTER FOR ENV & CONSERVATION LL
CR5964/790

Legend

- St2 WTG Location (SWT-3.0-108)
- St2 WTG Location (SWT-3.0-101)
- Constructed Stage 1 WTG Location
- Existing Prototype WTG
- Proposed St 2 Underground Cable
- Provisional DPC Access Tracks
- Provisional DPC Overhead & Cable Layout
- Proposed St 2 Overhead Line - Single Circuit
- Proposed St 2 Overhead Line - Double Circuit
- Proposed St 2 Roads
- Exisiting Roads
- Landowner Boundries
- Proposed_Laydown_Area
- Proposed_Concrete_Batching_Plant
- Dwellings

APPENDIX D

WIND MONITORING MAST INFORMATION AND LOCATIONS

GENERAL NOTES

G1. ALL DIMENSIONS ARE TO BE CHECKED ON SITE BEFORE WORK COMMENCES.

G2. DIMENSIONS SHALL NOT BE OBTAINED BY SCALING THE STRUCTURAL DRAWINGS.

G3. DURING CONSTRUCTION THE STRUCTURE SHALL BE MAINTAINED IN A STABLE CONDITION AND NO PART SHALL BE OVERSTRESSED.

G4. ALL WORKMANSHIP AND MATERIALS TO BE IN ACCORDANCE WITH THE CURRENT SAA CODES AND THE BY-LAWS AND ORDINANCES OF THE RELEVANT BUILDING AUTHORITY.

DESIGN LOADS

L1. WIND LOAD: REGION = A
TERRAIN CATEGORY - 1
RETURN PERIOD - 50 YRS.
DESIGN WORKING LIFE - 25 YR.
VELOCITY - Vu = 50m/s

FOUNDATIONS

F1. REQUIRED MINIMUM SAFE BEARING CAPACITY OF FOUNDATION MATERIAL SHALL BE ..... 100 kPA.

F2. WHERE LOOSE GROUND OR WATER INGRESS REQUIRES A WORKING SLAB THE CONTRACTOR MAY PROVIDE A BLINDING LAYER OF 15 MPa CONCRETE, 50mm THICK MINIMUM BENEATH ALL PAD FOOTINGS PRIOR TO INSTALLING MOISTURE BARRIER AND REINFORCEMENT.

F3. WHERE FILL OR BACKFILL IS REQUIRED, BECAUSE MATERIAL ON SITE IS UNSUITABLE FOR STANDARD COMPACTION SPECIFICATION, THEN IMPORTED FILL SHALL CONSIST OF APPROVED MATERIAL SUCH AS CRUSHED ROCK AND BE DEPOSITED IN LAYERS NOT EXCEEDING 150mm THICK, EACH LAYER BEING WELL COMPACTED TO ACHEIVE 95% MAX. DRY DENSITY. TO BE TESTED BY AN A MEMBER OF THE N.A.T.A.

CONCRETE

C1. ALL WORKMANSHIP AND MATERIALS SHALL BE IN ACCORDANCE WITH A.S. 3600.

C2. CONCRETE QUALITY AND COVER:
i). U.N.O. CONCRETE SLUMP SHALL NOT EXCEED 80mm.
ii). U.N.O. MAXIMUM AGGREGATE SIZE SHALL BE 20mm.
iii). CONCRETE GRADE AND COVER SHALL BE AS FOLLOWS:

ELEMENT	CONCRETE GRADE	COVER		CAST AGAINST OTHER FORMWORK OR THE GROUND.
		CAST AGAINST FORMS COMPLYING WITH AS 1509 FORMWORK CODE		
		NOT EXPOSED TO WEATHER, GROUND WATER OR FRESH WATER	EXPOSED TO GROUND WATER OR FRESH WATER	
FOOTINGS	N25	N/A	50	65

C3. ALL CONCRETE IS TO BE VIBRATED.

C4. BAR CHAIRS:
ALL CHAIRS SHALL BE LOCATED AT 800 CRS (BOTH WAYS) TO SUPPORT REINFORCEMENT AND GIVE THE CORRECT CONCRETE COVER.

C5. CONSTRUCTION JOINTS WHERE NOT SHOWN SHALL BE LOCATED TO THE APPROVAL OF THE ENGINEER.

C6. REINFORCEMENT SYMBOLS:

N - DENOTES GRADE 500 NORMAL DUCTILITY DEFORMED BAR.
Y - DENOTES GRADE 400 Y DEFORMED BAR.
R - DENOTES GRADE 250 R HOT ROLLED PLAIN BAR.
F - DENOTES GRADE HARD-DRAWN WIRE REINFORCING FABRIC.
W - DENOTES HARD-DRAWN PLAIN WIRE.
RF - DENOTES GRADE 500 RIBBED WIRE REINFORCING FABRIC.
SL/RL - DENOTES GRADE 500 LOW DUCTILITY RIBBED FABRIC.
THE NUMBER IMMEDIATELY FOLLOWING THESE SYMBOLS IS THE NUMBER OF MILLIMETRES IN BAR DIAMETER.
REINFORCEMENT SHALL COMPLY WITH AS. 4671.

C7. LAPS AND SPLICES TO REINFORCEMENT SHALL BE MADE ONLY IN THE POSITIONS AND TO THE DIMENSIONS SHOWN. TYPICAL FABRIC LAP, UNLESS NOTED OTHERWISE:

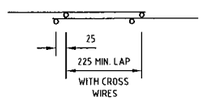

C8. UNLESS NOTED OTHERWISE ALL CAST-IN STEELWORK, INCLUDING HOLDING DOWN BOLTS SHALL BE GALVANIZED.

COMPACTION SPECIFICATION:

CONCRETE OPTION (1) FOR PERMANENT MASTS:

1. EXCAVATE ANCHOR PIT AND INSTALL STEEL ANCHOR AND ATTACHMENTS.

2. TO COVER ANCHOR BEAM INSTALL MASS CONCRETE TO AS.3600. PROVIDE MINIMUM BEAM COVERAGE OF 50mm.

3. FILL REMAINDER OF ANCHOR EXCAVATION WITH SELECT MATERIAL WON FROM EXCAVATION OF FROM SURROUNDING SOURCES AND COMPACT THE FILLING. SELECT FILL IS TO BE FREE FROM ANY ORGANIC MATERIAL SUCH AS ROOTS AND TOPSOIL AND HAVE NO GRAVEL OR ROCK FRAGMENTS GREATER THAN 40mm AS AN AVERAGE LEAST DIMENSION.

4. ADEQUATE COMPACTION IS ACHIEVED BY PROVIDING A COMPACTED DENSITY EQUAL TO A CONTROLLED FILL CLASSIFICATION. CONTROLLED FILL IS DEFINED IN AS. 2870. SANDY FILL IS TO BE PLACED IN LAYERS NOT GREATER THAN 300mm LOOSE. NON-SANDY SOILS AND CLAY SOILS REQUIRE LAYER DEPTHS NOT GREATER THAN 150mm WHEN COMPACTED. COMPACTION IS TO BE ACHIEVED BY MECHANICAL TAMPING. THIS WILL REQUIRE COMPACTION BY A VIBRATING PLATE ATTACHED TO A BACKHOE OR WALK BEHIND WACKER PACKER.

5. COMPLIANCE WITH CONTROLLED FILL IS DEEMED TO BE ACHIEVED IN SANDY SOILS IF A DYNAMIC CONE PENETROMETER TEST (AS DEFINED BY AS. 1289.6.3.3) PRODUCES A BLOW COUNT OF 7 OR MORE FOR 300mm. FOR NON SANDY AND CLAY SOILS CONTROLLED FILL IS DEEMED TO BE ACHIEVED IF SOIL IS MOIST AND COMPACTED IN LAYER DEPTHS NOT MORE THAN 150mm WHEN COMPACTED.

REPLACEMENT SOIL OPTION (2) FOR TEMPORARY MASTS:

1. EXCAVATE ANCHOR PIT AND INSTALL STEEL ANCHOR AND ATTACHMENTS.

2. TO COVER ANCHOR BEAM INSTALL SELECT FILL MATERIAL WON FROM EXCAVATION OR FROM SURROUNDING SOURCES AND COMPACT THE FILLING. COMPACT FILL IN 150mm COMPACTED DEPTH LAYERS AROUND BEAM. SOURCE FILL AS DESCRIBED IN SECTION 3 BELOW. TEST AS DESCRIBED IN SECTION 5 BELOW.

3. FILL REMAINDER OF ANCHOR EXCAVATION WITH SELECT MATERIAL WON FROM EXCAVATION OF FROM SURROUNDING SOURCES AND COMPACT THE FILLING. SELECT FILL IS TO BE FREE FROM ANY ORGANIC MATERIAL SUCH AS ROOTS AND TOPSOIL AND HAVE NO GRAVEL OR ROCK FRAGMENTS GREATER THAN 40mm AS AN AVERAGE LEAST DIMENSION.

4. ADEQUATE COMPACTION IS ACHIEVED BY PROVIDING A COMPACTED DENSITY EQUAL TO A CONTROLLED FILL CLASSIFICATION. CONTROLLED FILL IS DEFINED IN AS. 2870. SANDY FILL IS TO BE PLACED IN LAYERS NOT GREATER THAN 300mm LOOSE. NON-SANDY SOILS AND CLAY SOILS REQUIRE LAYER DEPTHS NOT GREATER THAN 150mm WHEN COMPACTED. COMPACTION IS TO BE ACHIEVED BY MECHANICAL TAMPING. THIS WILL REQUIRE COMPACTION BY RODDING, BY A VIBRATING PLATE ATTACHED TO A BACKHOE OR BY WALK BEHIND WACKER PACKER.

5. COMPLIANCE WITH CONTROLLED FILL IS DEEMED TO BE ACHIEVED IN SANDY SOILS IF A DYNAMIC CONE PENETROMETER TEST (AS DEFINED BY AS. 1289.6.3.3) PRODUCES A BLOW COUNT OF 7 OR MORE FOR 300mm. FOR NON SANDY AND CLAY SOILS CONTROLLED FILL IS DEEMED TO BE ACHIEVED IF SOIL IS MOIST AND COMPACTED IN LAYER DEPTHS NOT MORE THAN 150mm WHEN COMPACTED.

STEELWORK

S1. ALL WORKMANSHIP AND MATERIALS SHALL BE IN ACCORDANCE WITH AS. 4100 AND AS. 1554 EXCEPT WHERE VARIED BY CONTRACT DOCUMENTS.

S2. WELDED CONNECTIONS BETWEEN STRUCTURAL MEMBERS SHALL BE MIN. 6mm CONTINUOUS FILLET SP WELDS (OR SIZE EQUIVALENT TO THE MINIMUM THICKNESS OF CONNECTING MEMBERS WHERE LESS THAN 6mm) UNLESS NOTED OTHERWISE. WELDED CONNECTIONS BETWEEN LATTICE & CHORDS SHALL BE MINIMUM 6mm COMPLETE AND INCOMPLETE PENETRATION BUTT WELDS - CLASS SP.

S3. BOLT TYPES (AND DESIGNATIONS, WHERE USED) SHALL BE AS FOLLOWS:

4.6/S - COMMERCIAL BOLTS TO AS 1111, SNUG TIGHTENED.
8.8/S - HIGH STRENGTH STRUCTURAL BOLTS, WITH BOLTS, NUTS AND HARDENED WASHERS TO AS. 1252, SNUG TIGHTENED ONLY.
8.8/TB - HIGH STRENGTH STRUCTURAL BOLTS AS ABOVE, FULLY TENSIONED TO AS. 4100 IN A BEARING TYPE JOINT.
8.8/TF - HIGH STRENGTH STRUCTURAL BOLTS AS ABOVE ,FULLY TENSIONED TO AS. 4100 IN A FRICTION TYPE JOINT AND UNLESS NOTED OTHERWISE, WITH MATING SURFACES LEFT UNCOATED - CLEAN AS "ROLLED" CONDITION.

S4. M16 HIGH STRENGTH (8.8/S) BOLTS SHALL BE USED IN ALL CONNECTIONS UNLESS NOTED OTHERWISE. NOTWITHSTANDING THIS, NO STEEL TO STEEL CONNECTION SHALL BE MADE WITH LESS THAN 2-M16 (8.8/S) BOLTS, UNLESS NOTED OTHERWISE.

S5. BOLT HOLES IN STEEL TO STEEL AND STEEL TO CONCRETE CONNECTIONS SHALL BE BOLT DIAMETER + 2mm AND + 3mm RESPECTIVELY. FOR BASE PLATES ALLOW BOLT DIAMETER + 6mm.

S6. ALL HOLDING DOWN BOLTS SHALL BE GRADE 4.6/S.

S7. UNLESS NOTED OTHERWISE ALL NUTS, BOLTS & WASHERS SHALL BE HOT DIP GALVANIZED.

S8. ALL PLATES SHALL BE 10mm THICK UNLESS NOTED OTHERWISE.

S9. E48XX ELECTRODES SHALL BE USED FOR ALL WELDS UNLESS NOTED OTHERWISE.

S10. ALL WELDS SHALL BE CATEGORY SP TO AS. 1554 PART 1 UNLESS NOTED OTHERWISE.

S11. STEEL FABRICATOR SHALL PROVIDE ALL BOLTS NECESSARY FOR THE ERECTION OF THE STEELWORK AND BOLTS, HOLES AND CLEATS NECESSARY FOR THE ERECTION OF STEELWORK AS SHOWN , NOTED OR IMPLIED.

S12. WHEN SHOP SPLICES ARE NECESSARY IN BEAMS THE POSITION AND DETAIL OF THE SPLICES IS TO BE APPROVED BY THE ENGINEER.

S13. PROTECTIVE SURFACE TREATMENT TO STRUCTURAL STEELWORK SHALL BE AS FOLLOWS, UNLESS NOTED OTHERWISE:

PROTECTIVE SURFACE TREATMENT:

HOT DIP GALVANIZE SYSTEM "HDG600" IN ACCORDANCE WITH AS/NZS 2312 . (UNO.)

Issue	Date	Amendment
A	10-06-10	GRADE 300 NOTE DELETED.

Project:
4 x 80m MASTS
TERRAIN CATEGORY 1 - REGION "A"
AT: WOODLAWN, NSW.

Client: AUSTRALIAN RADIO TOWERS

Title: GENERAL NOTES

ARDILL PAYNE & PARTNERS
Consulting Civil & Structural Engineers Project Managers
Town Planners & Surveyors
79 Tamar Street
P.O. Box 20
BALLINA NSW 2478
Telephone: 02 6686 3280
Facsimile: 02 6686 7920
Email: info@ardillpayne.com.au
Website: www.ardillpayne.com.au

Design	ZW./BP.	Scale at A3	-
Drawn	JIM.Z.	Datum	
Date	JUNE 2010	Filename	6912-80m-Woodlawn-NSW-N1a.dwg
Checked	BP/cm	Approved	
Job No.	09/6912	Dwg. No. 80m-Woodlawn-NSW-N1	Issue A

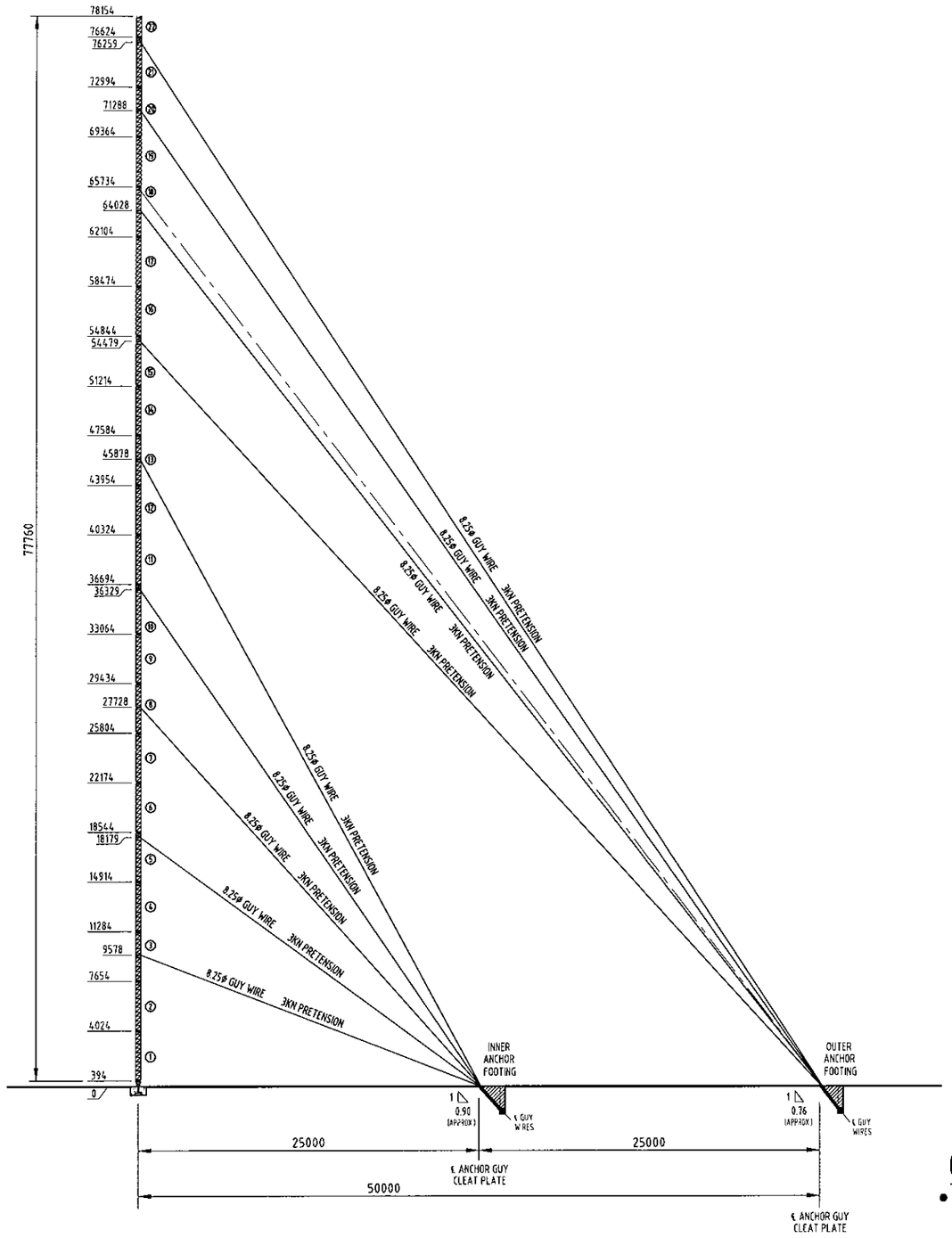

NOTES:

1. TURN BUCKLES J & E 16mm.
2. GUYS 8.25mm (7/2.75mm STRANDS) G1320.
   - TENSILE STRENGTH = 1370 MPa.
   - BREAKING FORCE = 53.6 KN.
3. PRE-TENSION TO 3.0 KN.
4. ALL BOLTS TO BE SUPPLIED WITH NUT & SNUG TIGHTENED.
5. ALL BOLTS 16mm AND LARGER TO BE SUPPLIED G8.8 WITH SPRING WASHERS, BOLTS 12mm AND SMALLER TO BE SUPPLIED G4.6 WITH FLAT WASHER U.N.O.
6. ALL BOLTS TO HAVE THREADS INCLUDED UNLESS INDICATED BY X/S.
7. ONE FACE OF MAST TO BE FITTED WITH FALL ARREST DEVICE AT 8m INTERVALS INSTALLED TO MANUFACTURER'S INSTRUCTIONS.
8. STRUCTURE TYPE II AS PER AS. 3995 - 1994.

GENERAL MAST LAYOUT

- REFER DWG. N1 FOR TYPICAL NOTES.

Issue	Date	Amendment

Project:

4 x 80m MASTS
TERRAIN CATEGORY 1 - REGION "A"
AT: WOODLAWN, NSW.

Client: AUSTRALIAN RADIO TOWERS

Title: GENERAL MAST LAYOUT

ARDILL PAYNE & PARTNERS
Consulting Civil & Structural Engineers Project Managers
Town Planners & Surveyors
79 Tamar Street
P.O. Box 20
BALLINA NSW 2478
Telephone: 02 6686 3280
Facsimile: 02 6686 7920
Email: info@ardillpayne.com.au
Website: www.ardillpayne.com.au

Design	ZW./BP.	Scale at A3	1:400, 1:50
Drawn	JM.Z.	Datum	
Date	JUNE 2010	Filename	6912-80m-Woodlawn-NSW-s1.dwg
Checked		Approved	
Job No	09/6912	Dwg. No.	80m-Woodlawn-NSW-s1
		Issue	

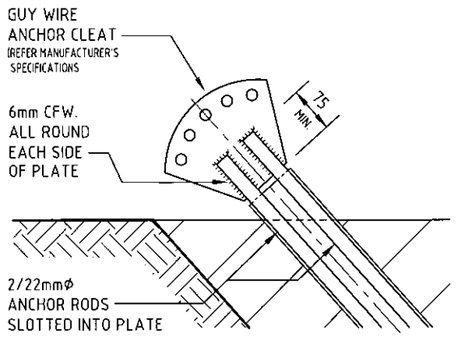

DETAIL A

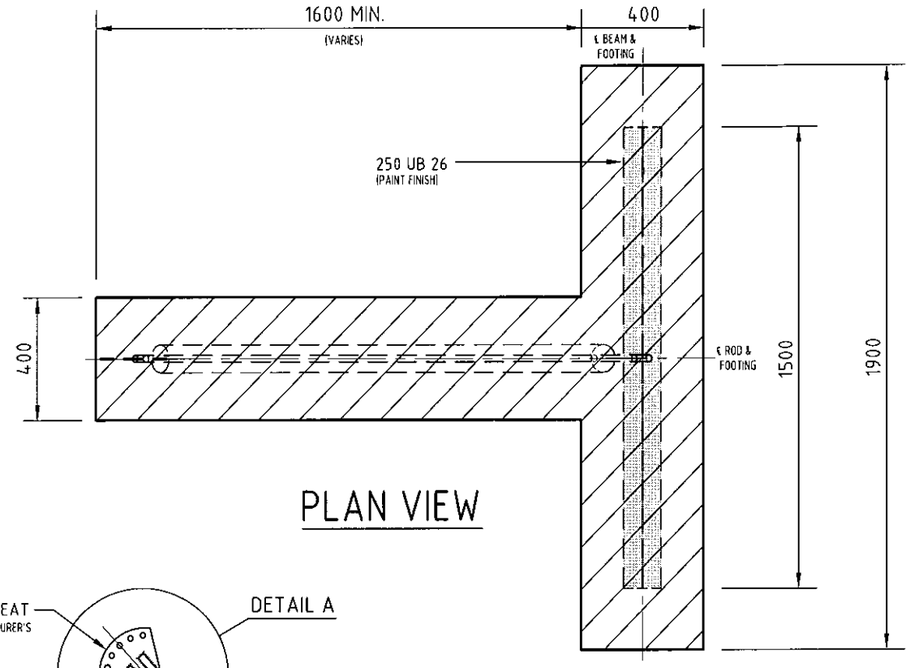

PLAN VIEW

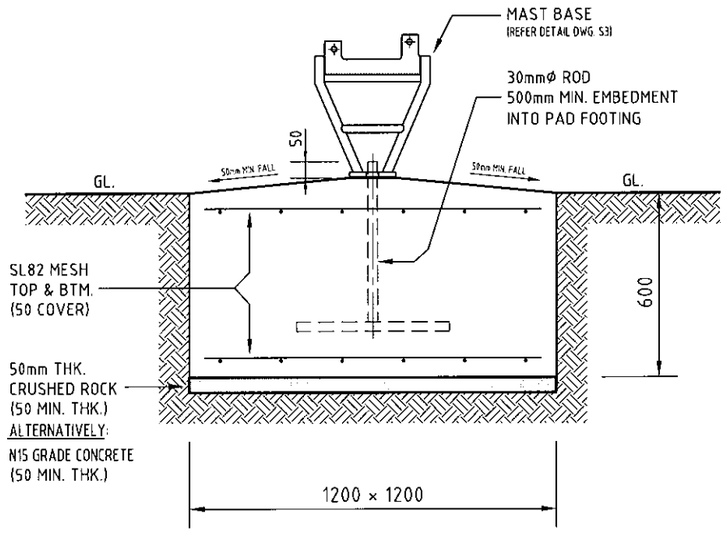

TYPICAL MAST BASE FOOTING DETAIL

- REFER DWG. N1 FOR CONCRETE NOTES.

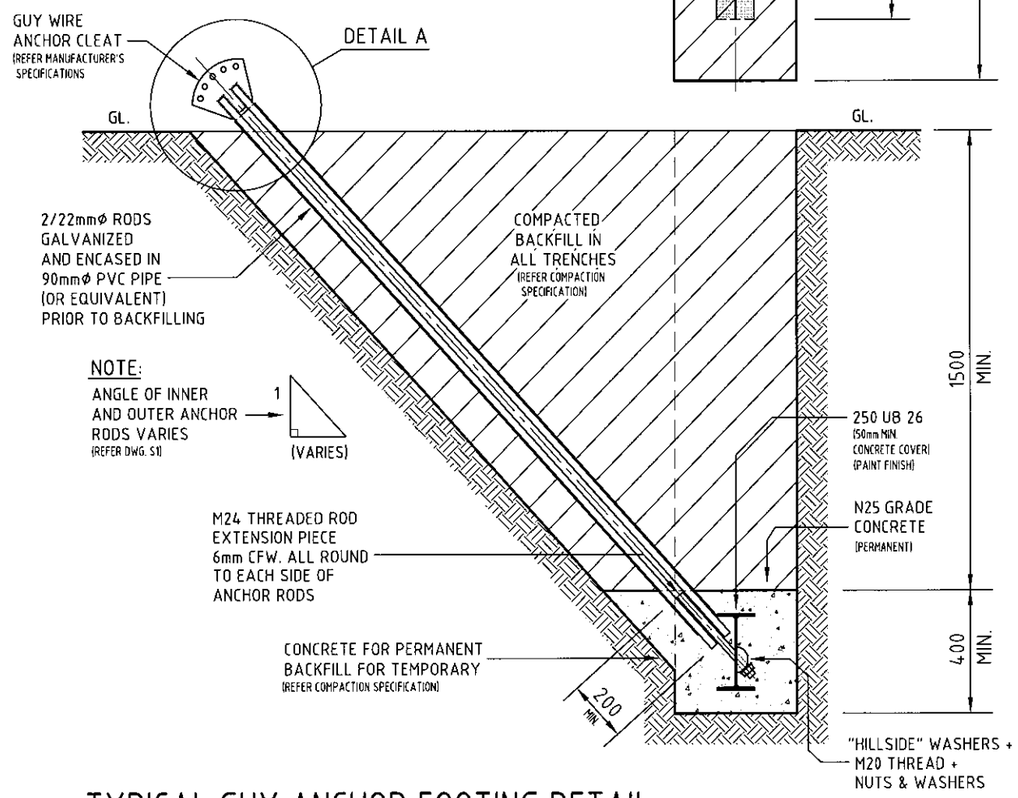

TYPICAL GUY ANCHOR FOOTING DETAIL

SECTION

Issue	Date	Amendment

Project:

4 x 80m MASTS
TERRAIN CATEGORY 1 - REGION "A"
AT: WOODLAWN, NSW.

Client: AUSTRALIAN RADIO TOWERS

Title: FOOTING DETAILS

ARDILL PAYNE & PARTNERS
Consulting Civil & Structural Engineers Project Managers
Town Planners & Surveyors
79 Tamar Street
P.O. Box 20
BALLINA NSW 2478
Telephone: 02 6686 3280
Facsimile: 02 6686 7920
Email: info@ardillpayne.com.au
Website: www.ardillpayne.com.au

Design	ZW./BP.	Scale at A3	1:20, 1:10
Drawn	JIM.Z.	Datum	
Date	JUNE 2010	Filename	6912-80m-Woodlawn-NSW-s2.dwg
Checked		Approved	
Job No.	09/6912	Dwg. No.	80m-Woodlawn-NSW-s2
		Issue	

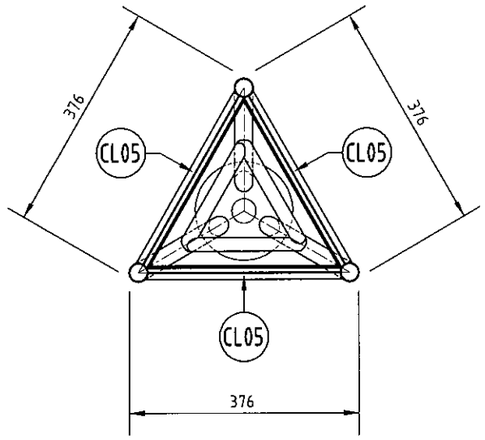

TOP VIEW

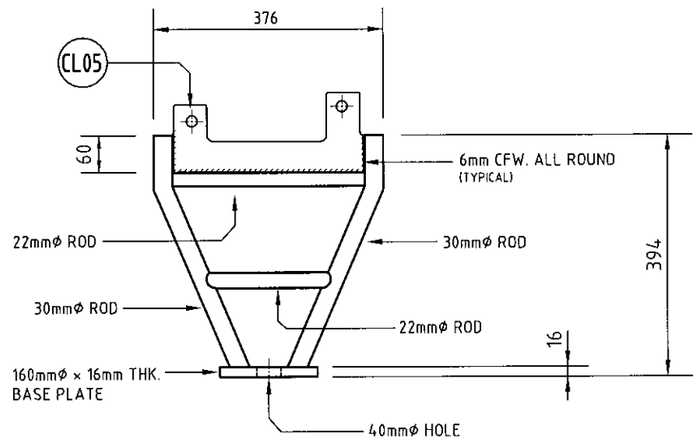

MAST BASE DETAIL

• REFER DWG. N1 FOR STEELWORK NOTES.

Issue	Date	Amendment

Project:

4 x 80m MASTS
TERRAIN CATEGORY 1 - REGION "A"
AT: WOODLAWN, NSW.

Client: AUSTRALIAN RADIO TOWERS

Title: MAST BASE DETAILS

ARDILL PAYNE & PARTNERS
Consulting Civil & Structural Engineers Project Managers
Town Planners & Surveyors
79 Tamar Street
P.O. Box 20
BALLINA NSW 2478
Telephone: 02 6686 3280
Facsimile: 02 6686 7920
Email: info@ardillpayne.com.au
Website: www.ardillpayne.com.au

Design	ZW./BP.	Scale at A3	1:10
Drawn	JIM.Z.	Datum	
Date	JUNE 2010	Filename	6912-80m-Woodlawn-NSW-s3.dwg
Checked		Approved	
Job No.	09/6912	Dwg. No.	80m-Woodlawn-NSW-s3
		Issue	

S:\01 Jobs\6900-6999\6912 Aust Radio Towers\05 Drawings\02 Structural\01 Current\01 ART Jobs\80m Woodlawn\NSW\6912-80m-Woodlawn-NSW-s3.dwg 29/6/2010 2:07:32 PM

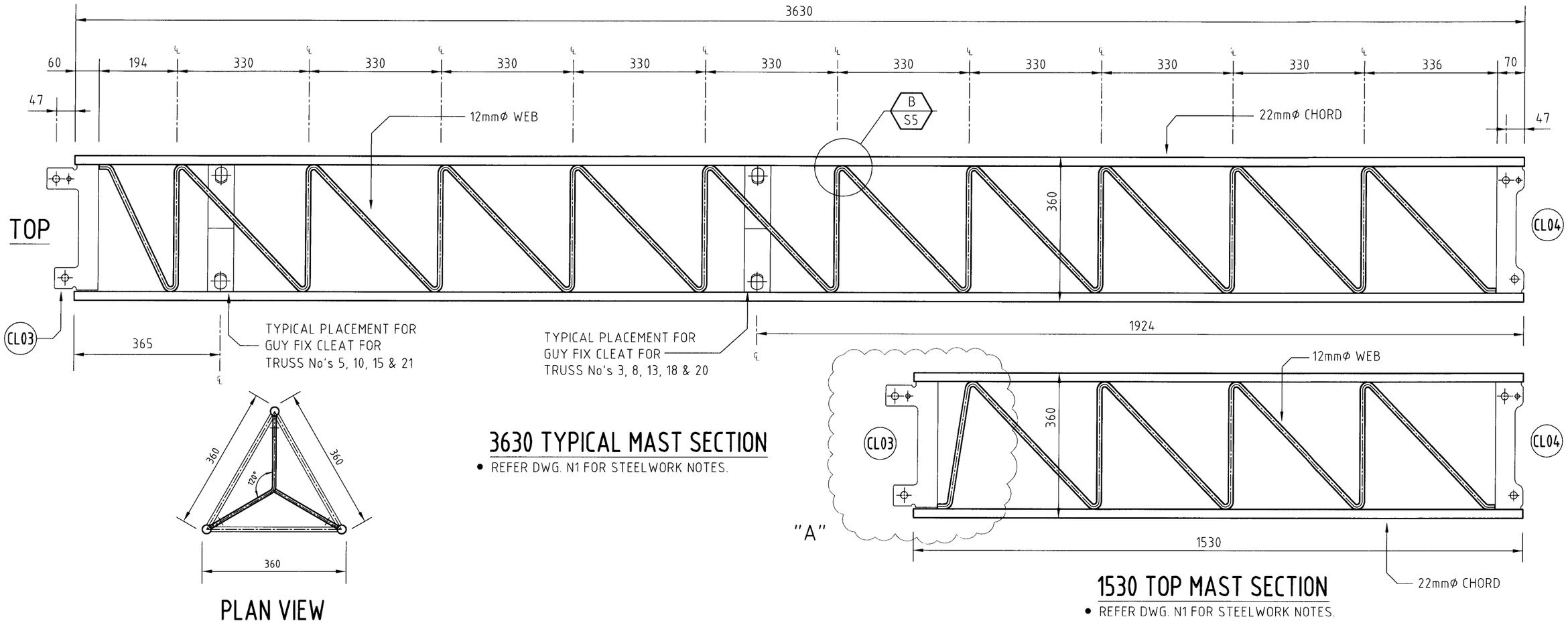

Issue	Date	Amendment
A	04-06-10	CL03 ADDED TO TOP MAST SECTION

Project:

4 x 80m MASTS
TERRAIN CATEGORY 1 - REGION "A"
AT: WOODLAWN, NSW.

Client: AUSTRALIAN RADIO TOWERS

Title: MAST SECTION DETAILS

ARDILL PAYNE & PARTNERS
Consulting Civil & Structural Engineers Project Managers
Town Planners & Surveyors
79 Tamar Street
P.O. Box 20
BALLINA NSW 2478
Telephone: 02 6686 3280
Facsimile: 02 6686 7920
Email: info@ardillpayne.com.au
Website: www.ardillpayne.com.au

Design	ZW./BP.	Scale at A3	1:10, 1:5
Drawn	JM.Z.	Datum	
Date	JUNE 2010	Filename	6912-80m-Woodlawn-NSW-s4a.dwg
Checked		Approved	
Job No.	09/6912	Dwg. No.	80m-Woodlawn-NSW-s4
		Issue	A

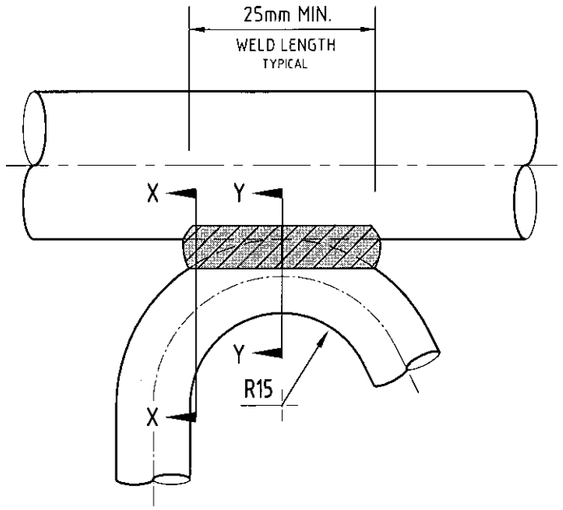

B / S5 DETAIL

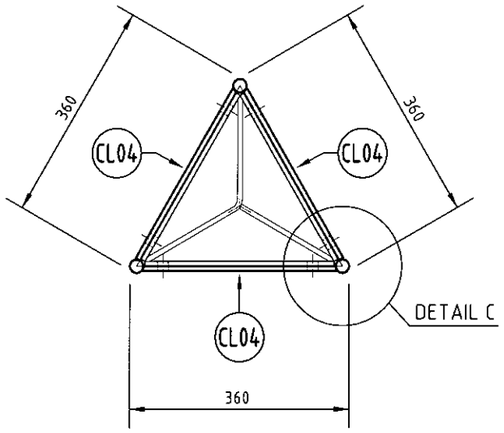

PLAN VIEW

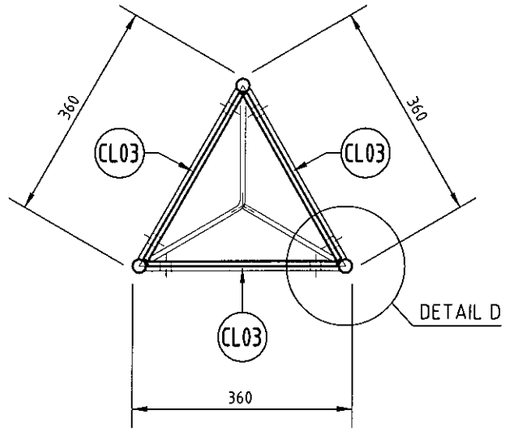

PLAN VIEW

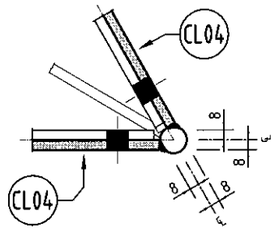

DETAIL C

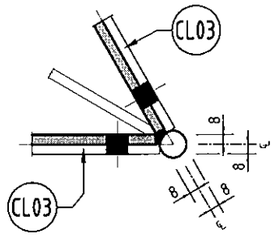

DETAIL D

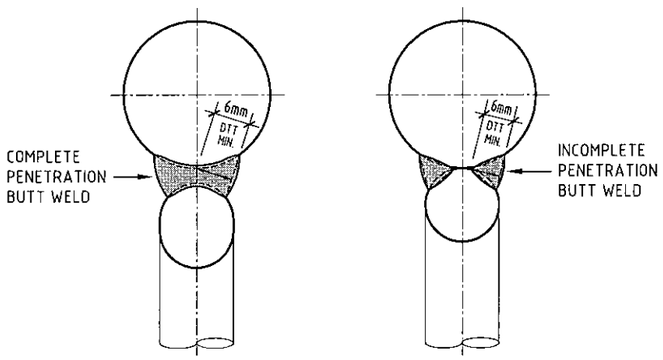

SECTION X

SECTION Y

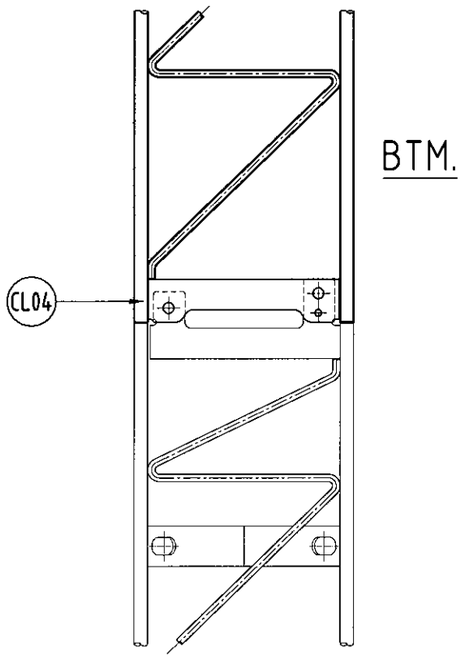

BTM.

BOTTOM MAST
ATTACHMENT DETAIL

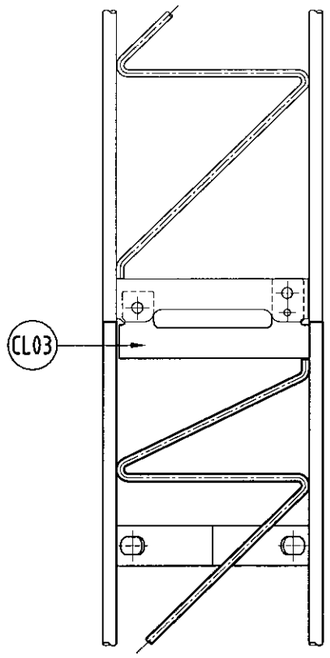

TOP

TOP MAST
ATTACHMENT DETAIL

Issue	Date	Amendment

Project:

4 x 80m MASTS
TERRAIN CATEGORY 1 - REGION "A"
AT: WOODLAWN, NSW.

Client: AUSTRALIAN RADIO TOWERS

Title: MAST SECTION ATTACHMENT DETAILS

ARDILL PAYNE & PARTNERS
Consulting Civil & Structural Engineers Project Managers
Town Planners & Surveyors
79 Tamar Street
P.O. Box 20
BALLINA NSW 2478
Telephone: 02 6686 3280
Facsimile: 02 6686 7920
Email: info@ardillpayne.com.au
Website: www.ardillpayne.com.au

Design	ZW./BP.	Scale at A3	1:10, 1:1
Drawn	JIM.Z.	Datum	
Date	JUNE 2010	Filename	6912-80m-Woodlawn-NSW-s5.dwg
Checked		Approved	
Job No.	09/6912	Dwg. No.	80m-Woodlawn-NSW-s5
		Issue	

S:\01 Jobs\6900-6999\6912 Aust Radio Towers\05 Drawings\02 Structural\01 Current\01 ART Jobs\80m Woodlawn-NSW\9912-80m-Woodlawn-NSW-s5.dwg, 2/06/2010 2:07:49 PM

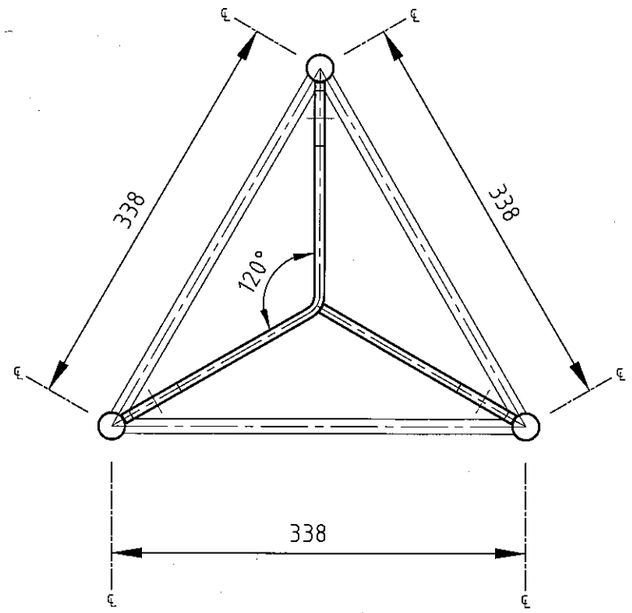

END VIEW

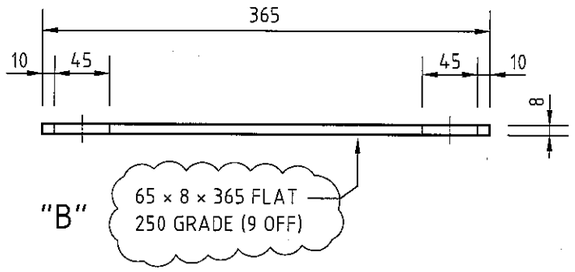

PLAN VIEW

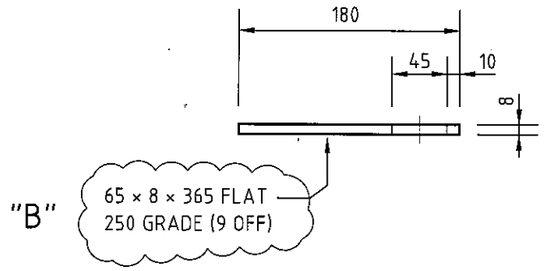

PLAN VIEW

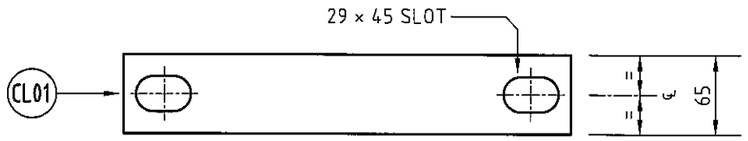

SIDE VIEW

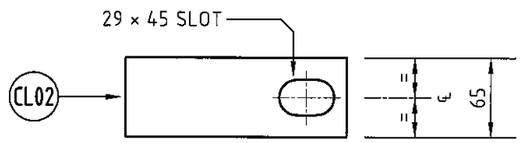

SIDE VIEW

GUY FIX CLEAT FOR 80m MAST

- REFER DWG. N1 FOR STEELWORK NOTES.

Issue	Date	Amendment
B	14-07-10	GRADE 250 NOTE ADDED.
A	10-06-10	GRADE 300 NOTE DELETED.

Project:

4 x 80m MASTS
TERRAIN CATEGORY 1 - REGION "A"
AT: WOODLAWN, NSW.

Client: AUSTRALIAN RADIO TOWERS

Title: GUY CLEAT FIX DETAILS

ARDILL PAYNE & PARTNERS
Consulting Civil & Structural Engineers Project Managers
Town Planners & Surveyors
79 Tamar Street
P.O. Box 20
BALLINA NSW 2478
Telephone: 02 6686 3280
Facsimile: 02 6686 7920
Email: info@ardillpayne.com.au
Website: www.ardillpayne.com.au

Design	ZW./BP.	Scale at A3	1:5
Drawn	JIM.Z.	Datum	
Date	JULY 2010	Filename	6912-80m-Woodlawn-NSW-s6b.dwg
Checked	BP	Approved	
Job No.	09/6912	Dwg. No.	80m-Woodlawn-NSW-s6
		Issue	B

Wind Monitoring Mast Location

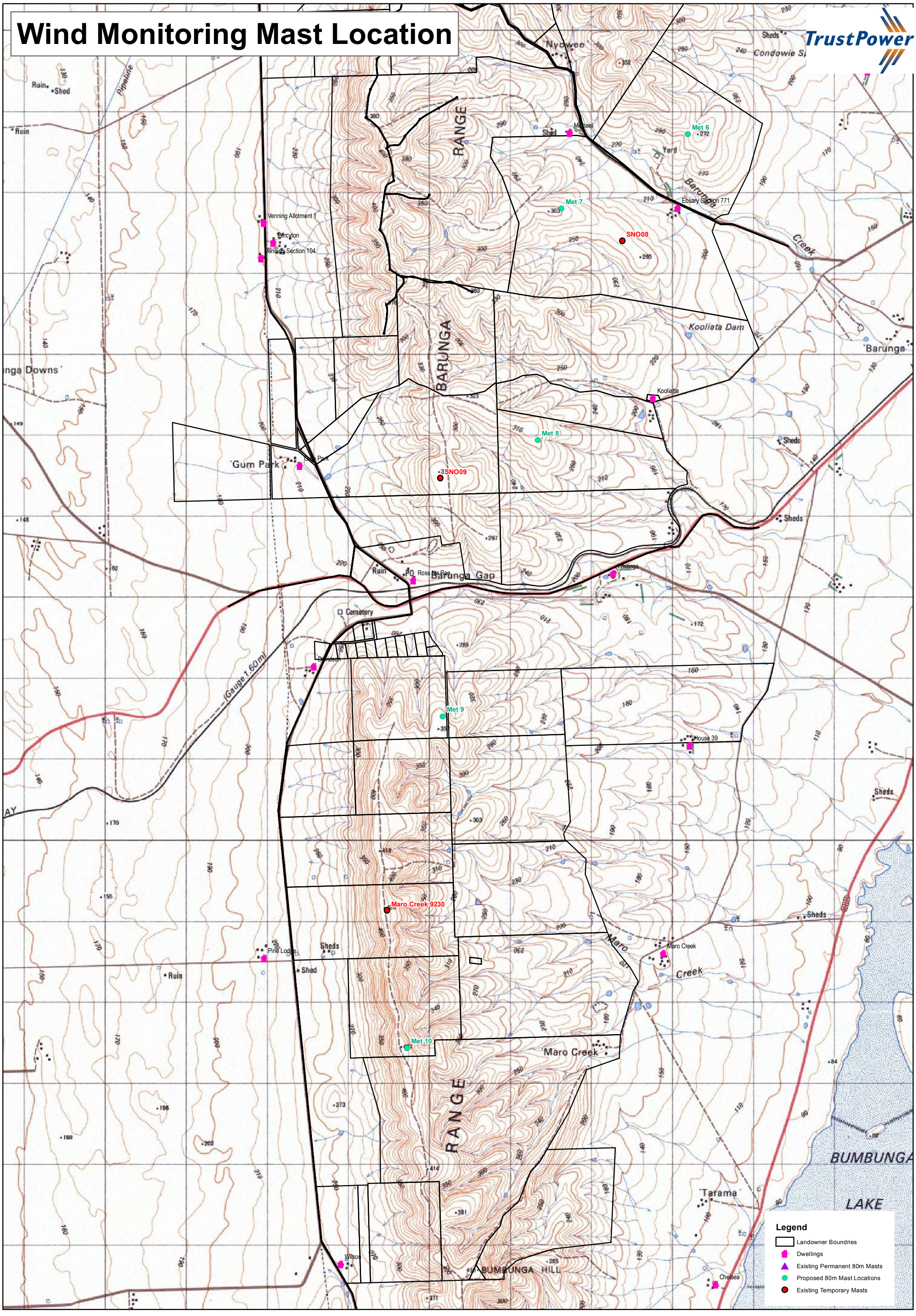

APPENDIX E

WAKEFIELD REGIONAL COUNCIL LETTERS - EXTENSION OF TIME AND EPA REFERRAL

Wakefield Regional Council
ABN: 97 171 984 493

ECMM:SLD
File 3.3.2.50
Reference: IEM13572

6 November 2010

Trustpower
GPO Box 1512
ADELAIDE SA 5001

Attention: Rontheo Van Zyl

Dear Rontheo

Re: Snowtown Wind Farm (Stage 2) – noise condition compliance requirement for final layout variation (Development Number 373/048/10) – EPA Referral

I am responding to your letter dated 25 November 2010 in regard to the above matter.

Please be advised that subject to Council being satisfied there will be no impact on adjoining residences, as a result of the final selected turbine and layout, referral to the EPA will not be required. However any referral for the aforementioned is subject to change should Council have any concerns.

For any further assistance or advice please contact Council's Planning Consultant David Hutchison, mobile 0418832334.

Yours faithfully

Elca McCarthy
ENVIRONMENTAL SERVICES MANAGER

emccarthy@wakefieldrc.sa.gov.au

Office: 52 Lund Place, Balaklava SA 5461 *Telephone:* (08) 8862 0800 *Fax:* (08) 8862 1115
Postal Address: PO Box 167, Balaklava SA 5461 *Email:* admin@wakefieldrc.sa.gov.au
Website: www.wakefieldrc.sa.gov.au

Wakefield Regional Council
ABN: 97 171 984 493

ECMM:SLD
File 3.3.2.50
Reference: IEM13572

6 November 2010

Trustpower
GPO Box 1512
ADELAIDE SA 5001

Attention: Rontheo Van Zyl

Dear Rontheo

Re: Snowtown Wind Farm (Stage 2) – Application for time extension (Development Number 373/048/10)

I am responding to your letter dated 25 November 2010 in regard to the above development.

Please be advised that I will grant you a 3 year extension from the 23 September 2011, by which time (23 September 2014) it is anticipated that the project will be substantially commenced.

For any further assistance or advice please contact Council's Planning Consultant David Hutchison, mobile 0418832334.

Yours faithfully

Elca McCarthy
ENVIRONMENTAL SERVICES MANAGER

emccarthy@wakefieldrc.sa.gov.au

Office: Scotland Place, Balaklava SA 5461 *Telephone:* (08) 8862 0800 *Fax:* (08) 8862 1115
Postal Address: PO Box 167, Balaklava SA 5461 *Email:* admin@wakefieldrc.sa.gov.au
Website: www.wakefieldrc.sa.gov.au

APPENDIX F

ECOLOGICAL ASSESSMENT REPORT

ebs ecology

Snowtown Wind Farm Stage 2
Flora and fauna report

Snowtown Wind Farm Stage 2 – Flora and fauna report

17th April 2012

Version 5.0

Prepared by EBS Ecology for TrustPower Australia

Document Control					
Revision No.	Date issued	Authors	Reviewed by	Date Reviewed	Revision type
1.0	14/02/2012	A. Derry/C. Harrison/ T. Brown	A. Everitt	15/02/2012	Draft
2.0	23/02/2012	A. Derry/C. Harrison/ T. Brown	T. Brown	22/02/2012	Draft
3.0	7/03/2012	A. Derry/C. Harrison/ T. Brown	T. Brown	7/03/2012	Draft
4.0	10/04/2012	A. Derry/C. Harrison/ T. Brown	T. Brown	10/04/2012	Draft
5.0	17/4/2012	A. Derry/C. Harrison/ T. Brown	A. Everitt	17/4/2012	Final

Distribution of Copies			
Revision No.	Date issued	Media	Issued to
1.0	17/02/2012	Electronic	Rontheo van Zyl, TrustPower Australia
2.0	23/02/2012	Electronic	Rontheo van Zyl, TrustPower Australia
3.0	7/03/2012	Electronic	Rontheo van Zyl, TrustPower Australia
4.0	10/04/2012	Electronic	Rontheo van Zyl, TrustPower Australia
5.0	17/4/2012	Electronic	Rontheo van Zyl, TrustPower Australia

CITATION: EBS (2012) *Snowtown Wind Farm Stage 2 – Flora and fauna report.* Report to TrustPower Australia. EBS Ecology, Adelaide.

Front cover photo: View of wind turbines at Snowtown Wind Farm Stage 1, from the Stage 2 area.

ebs ecology

EXECUTIVE SUMMARY

A total of approximately 82.3 ha were proposed for clearance to facilitate the construction of the Snowtown Wind Farm Stage 2 project. Twelve vegetation associations have been recorded within the proposed Stage 2 Snowtown Wind Farm. Out of the 12 vegetation associations, five were defined as grassland. These grassland associations were in good condition in terms of species diversity and density of plants, however they also contained many exotic grasses and herbs. Cropping Land and Exotic Grassland (grazing land) were the two dominant vegetation associations recorded across the proposed Stage 2 site, with 3190 ha and 2992 ha recorded respectively. The major associations found across the Stage 2 site included:

- *Allocasuarina verticillata* Low Woodland +/- *Bursaria spinosa* +/- *Lepidosperma viscidum*
- *Austrostipa* ssp./ *Austrodanthonia* sp. Grassland +/- *Bursaria spinosa*
- *Lomandra* spp. / *Austrostipa* ssp./ *Austrodanthonia* sp. Grassland
- *Eucalyptus oleosa* +/- *Eucalyptus gracilis* +/- *Eucalyptus porosa* Low Woodland
- Exotic Grassland (grazing land)
- Cropping Land.

All potential *Lomandra effusa* (Iron Grass) Grassland was assessed against criteria listed in the '*Iron-grass Natural Temperate Grassland of South Australia EPBC Act Policy Statement 3.7*' to determine whether they qualified as the critically endangered TEC (Threatened Ecological Community) (DEWR 2007). The *Lomandra effusa* Grassland areas identified within the proposed Stage 2 did not qualify as the critically endangered TEC under the EPBC Act. Despite not qualifying as a TEC, a large patch of *L. effusa* Grassland was present along the access track of WTG35-WTG37 and is still considered to be of ecological value.

No nationally threatened flora species were detected during the survey. The State rare Long-flower Cryptandra (*Cryptandra sp Long hypanthium*) was detected across the proposed Stage 2 site in several sites of *Eucalyptus* Low Woodlands. The *Allocasuarina verticillata* (Drooping Sheoak) Grassy Low Woodland is listed as a threatened ecosystem in South Australia (DEH Provisional list 2005). The *Allocasuarina verticillata* Low Woodland +/- *Bursaria spinosa* +/- *Lepidosperma viscidum* Association was scattered along the eastern slopes of the southern extent, located in a large patch in the centre of the project site and scattered along the western slopes of the northern extent of the proposed Stage 2 site.

A total of ten vegetation associations and large areas of cropping land were defined within the proposed transmission line alignment (EBS 2010b). The dominant vegetation across the areas surveyed was

cropped paddocks. No national or state conservation rated flora species were detected within the proposed transmission line alignment. Remnant vegetation was confined to the following areas of the proposed alignment:

- Several sections of roadside reserves which contained Mallee, Shrubland and Grassland associations.
- A low-lying area which supports a *Nitraria billardierei* (Nitre Bush) Open Shrubland and *Tecticornia pergranulata* ssp. *pergranulata* (Black-seed Samphire) Low Shrubland.
- A section of *Eucalyptus porosa* (Mallee Box) Very Open Mallee.

The proposed Stage 2 Snowtown Wind Farm was generally degraded in terms of habitat value for native fauna with few native fauna species recorded (EBS 2008).

No reptile species of national conservation significance were detected during surveys completed within the proposed Stage 2 Snowtown Wind Farm. The majority of habitat available within the project site was considered unsuitable for the Pygmy Blue-tongue Lizard (EBS 2009, 2010a). These 'unsuitable' sites were located on exposed ridge tops or foot slopes where the soil surface was too rocky or on lower ground that has been cropped. A total of 60 spider burrows were inspected in survey areas. The areas that offered the greatest habitat value within the proposed Stage 2 were unploughed areas of native grasslands; Iron Grass (*Lomandra spp*) Grassland, Spear Grass *(Austrostipa sp)* / Wallaby grass *(Austrodanthonia sp.)* Grassland and Exotic Grasslands were deemed suitable habitat. The Flinders Worm-lizard is considered to be common throughout South Australia and although habitat was deemed suitable on site, no individuals were found (EBS 2009; 2010b).

A total of 730 birds from 40 species were recorded during the 2008 survey at the proposed Stage 2 wind farm site (EBS 2008). Out of the 40 species recorded during the 2008 survey, one nationally significant species and four State rare bird species were recorded. These included the migratory Rainbow Bee-eater (*Merops ornatus*), Elegant Parrot (*Neophema elegans*), Hooded Robin (*Melanodryas cucullata cucullata*), Jacky Winter (*Microeca fascinans fascinans*) and Peregrine Falcon (*Falco peregrinus*).

A total of 11 Wedge-tailed Eagle (*Aquila audax*) nests were identified throughout the Stage 2 project site. Surveys were conducted to determine the breeding status at each nest; data included signs of activity, eagle behaviour and location of each nest site. Three out of the 11 nests identified remained consistently active across six survey periods.

A consolidation of results from all surveys shows that:

- A cluster of three nests (Nest 2, 3 and 4) belonged to a single breeding pair;
- A second cluster of three nests (Nest 5, 6 and 7) belonged to a single breeding pair;

- Nests 8 and 9 belonged to a single breeding pair and
- Nest 10 and 11 may have belonged to a breeding pair each (although data collected during the 2010 and 2011 breeding season were not conclusive).

Six bat species were identified during the 2008 survey (EBS 2008). These included: Gould's Wattled Bat (*Chalinolobus gouldii*), Chocolate Wattled Bat (*Chalinolobus morio*), Southern Freetail-bats (several undefined species) (*Mormopterus sp*), Lesser Long-eared Bat (*Nyctophilus geoffroyi*), White-striped Freetail-bat (*Tadarida australis*) and Southern Forest Bat (*Vespadelus regulus*). No bat species of conservation significance were identified from the AnaBat calls (EBS 2008). Several calls of the *Mormopterus* genus were recorded, some of which may be of conservation significance (EBS 2008).

An EPBC referral, dated 29 January 2010, found that the proposed action '*to develop stage two of the Snowtown Wind Farm and associated transmission line, near Snowtown, South Australia'* was deemed not a controlled action (EPBC 2009/5073). No additional follow-up surveys are required as the existing grasslands did not qualify as the listed community under the EPBC Act.

It is unlikely that the proposed Stage 2 Snowtown wind farm will impact on both the Pygmy Blue-tongue Lizard (*Tiliqua adelaidensis*) and the Flinders Worm-lizard (*Aprasia pseudopulchella*), if they were both to occur on site.

Where a 300m buffer around Wedge-tailed Eagle (*Aquila audax*) nests and avoidance of key periods is unattainable, there is likely to be some level of impact toward the species. Eagles on nest can be easily spooked by disturbance and the placement of turbines closer to nesting sites increases the potential for collision between birds and turbines. Recommendations also include monitoring the breeding activity of eagles at known nests and long-term monitoring of bird mortality.

Other recommendations include implementing best practice environmental measures during construction and minimising construction footprint.

TABLE OF CONTENTS

List of Tables

List of Figures

1 INTRODUCTION

TrustPower Australia (TrustPower) is proposing to erect an additional 90 wind turbine generators (WTG) and ancillary infrastructure for Stage 2 of the Snowtown Wind Farm, in the Mid North of South Australia.

The existing Snowtown Stage 1 Wind Farm, consisting of 48 turbines with associated access and electrical infrastructure, has been in operation since November 2008.

TrustPower secured Provisional Development Plan Consent (Planning Approval) in September 2010 and Native Vegetation Council (NVC) clearance approval in May 2011 for and indicative Stage 2 layout of up to 102 turbines. EBS Ecology (EBS) conducted the ecological surveys, impact assessments and Significant Environmental Benefit (SEB) off-set calculations for the indicative Stage 2 layout NVC and Planning Approval applications. TrustPower has since confirmed the final turbine model and associated layout for Stage 2 and will be submitting NVC and Planning Approval variation applications for the final layout.

EBS has been contracted by TrustPower to conduct a review of the ecological impact assessments for the final Snowtown Stage 2 Wind Farm project. This document is a consolidated report of all previous surveys; it will accompany the Planning Approval variation application submitted by TrustPower for the final layout.

SEB calculations for the following infrastructure components of the Stage 2 Wind Farm are provided in a separate report to the Native Vegetation Council (*Snowtown Stage 2 Wind Farm Native Vegetation Clearance Report* (EBS, 2012):

- up to 90 wind turbine generators (WTG) and associated hardstand areas
- access tracks
- underground 33kV cable routes
- overhead 33kV cable routes
- transmission line alignment
- on-site substation
- switching station (at eastern end of transmission line, to connect transmission line to main grid).

The calculation is required by TrustPower to make an appropriate SEB either through on-ground works (draft proposed vegetation management plan) or payment into the Native Vegetation Fund.

1.1 Objectives

- To consolidate previous EBS Ecology reports to accompany the Development Application (DA) Variation to be submitted by TrustPower Australia. This will incorporate:
    - a consolidation of recommendations from previous reports

  - a consolidation of mitigation measures from previous reports
  - any further assessments and findings into the DA Variation report.

- To provide a final report which summarises:
  - vegetation associations and condition of vegetation within sites of infrastructure and transmission lines that fall outside previously assessed sites
  - any threatened fauna species recorded during previous surveys conducted by EBS Ecology
  - any threatened flora species recorded during previous surveys conducted by EBS Ecology
  - any vegetation communities potentially qualifying as nationally listed TEC's as per the EPBC Guidelines
  - any habitat suitable for Pygmy Blue-tongue Lizard (*Tiliqua adelaidensis*) and Flinders Worm-lizard (*Aprasia pseudopulchella*)
  - location and status of Wedge-tailed Eagle (*Aquila audax*) nests within the final Stage 2 layout.

2 BACKGROUND INFORMATION

2.1 Site details

2.1.1 Project site

The Snowtown Wind Farm is situated approximately 150 kilometres north of Adelaide, within the mid-north region of South Australia (Figure 1). The project site is close to Yorke Peninsula and is less than 50 kilometres from both the Gulf of St Vincent and the Spencer Gulf. Stage 1 of the Snowtown Wind Farm is currently operational along the main ridgeline of the Barunga Range. Stage 2 of the Snowtown Wind Farm extends the current layout of turbines south along the Hummock Range main ridgeline through the Maro Creek site. It also extends east (adjacent Stage 1) along the smaller ridges and spurs, which stem off of the main ridgeline in the Barunga Range (Figure 2). There are 90 wind turbines proposed for Stage 2 of the Snowtown Wind Farm.

It should be noted that the infrastructure layout provided in this report has been altered from an original layout approved in the Provisional Development Plan Consent for Stage 2. Clearance and SEB calculations are reflective of additional changes made to the original consent, and are reflective of the final turbine type and design provided by TrustPower.

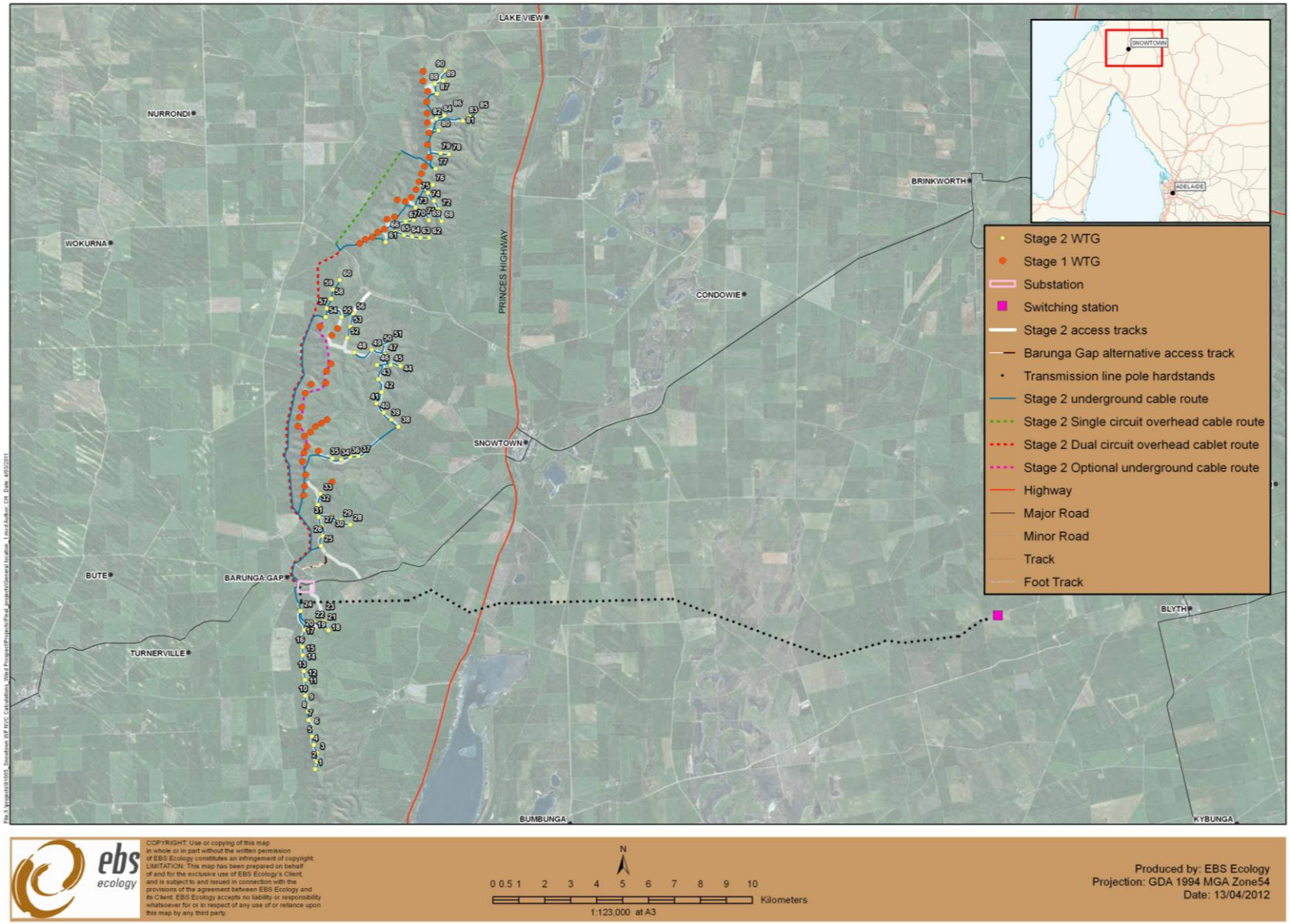

Figure 1. Location of Stage 1 and the proposed Stage 2 within the Snowtown Wind Farm.

2.2 Previous surveys conducted

Six surveys have been carried by EBS Ecology at the proposed Snowtown Wind Farm Stage 2 (Table 1).

An ecological assessment was conducted across the proposed Snowtown Wind Farm Stage 2 on September 24-26th, 2008 (EBS 2008). Within this September 2008 survey, flora and fauna were assessed across the survey area and the surrounding landscape. The assessment focussed on determining vegetation associations and fauna habitat present within the Stage 2 project site, detailing their condition and significance, particularly in relation to threatened species and communities that may exist on site.

As an outcome of the September 2008 field survey efforts, several recommendations were made and were the catalyst for a second targeted survey conducted in July 2009 (EBS 2009). The targeted survey conducted in July 6-10th 2009 was undertaken to determine the likelihood of:

1. the nationally endangered Pygmy Blue-tongue Lizard, listed under the *Environmental Biodiversity and Protection Conservation Act 1999,* occurring on site;

2. disturbance to Wedge-tailed Eagle breeding activity, from the proposed wind turbines. This included determining the location and use of nest sites within Stage 2; and

3. *Lomandra effusa* (Iron Grass) Grasslands being identified as the nationally critically endangered vegetation community, *Iron-Grass Natural Temperate Grassland of South Australia*, listed under the EPBC Act.

Additionally, a vegetation survey of the proposed transmission line options were assessed during the 2009 survey (EBS 2009). An inventory of the vegetation associations present along the proposed routes were detailed, with particular reference to their condition and biodiversity value to the area. The results were used to determine the preferred option for the location of the transmission alignment from a biodiversity value.

A Pygmy Blue-tongue Lizard presence / absence survey of the Snowtown Stage 2 Wind Farm site (Infrastructure corridor and turbine locations) was conducted in November 2009 (EBS 2010a). The Pygmy Blue-tongue Lizard (PBT) has an endangered rating under the *Environment Protection and Biodiversity Conservation Act 1999*. The 2009 survey followed an ecological assessment of the Snowtown Stage 2 Wind Farm site in September 2008 (EBS 2008) and a flora and fauna targeted assessment in July 2009 (EBS 2009). A recommendation from the initial ecological assessments was to conduct a PBT presence / absence survey within identified potential PBT habitat. The survey investigated:

- spider holes within a 50m corridor of previously identified potential PBT habitat

- all potential PBT burrows using an optic fibre burrowscope. Spider burrows that were not checked using the burrowscope included any burrows that were inhabited by large ants or those that had an opening diameter of less than 5 millimetres (considered too small for juvenile PBT's).

A vegetation survey and a Pygmy Blue-tongue (PBT) Lizard presence / absence survey, of a proposed transmission line associated with the Snowtown Stage 2 Wind Farm, was undertaken in December 2009 (EBS 2010b). This survey followed an ecological assessment of Snowtown Wind Farm Stage 2 in September 2008 (EBS 2008) and two transmission line assessments during October 2009 (EBS 2009). The vegetation survey included recording:

- changes in vegetation associations along the alignment
- condition ratings were applied to each vegetation association recorded
- species lists (native and introduced flora) were compiled for each vegetation association
- representative photos were taken of each vegetation association.

EBS Ecology was contracted by TrustPower in 2010 to calculate the required SEB off-set for the Snowtown Stage 2 Wind Farm project (EBS 2010c). This report provided a summary of the SEB off-set site required and supported an application to obtain approval to clear native vegetation for the project under the *Native Vegetation Act 1991* (EBS 2010c).

Targeted Wedge-tailed Eagle (*Aquila audax*) nest searches were completed in 2008-2011 (EBS 2008; 2009) within the proposed Stage 2 Snowtown Wind Farm. Wedge-tailed Eagle nests were originally determined within the flora and fauna targeted assessment completed by EBS (EBS 2009); a brief summary of the breeding status of the eagle nests was provided.

Pre-construction monitoring of Wedge-tailed Eagle nests at the Snowtown Stage 2 Wind Farm site was conducted throughout the 2010 breeding season and one survey completed at the end of the 2011 breeding season. A monitoring program was developed for the site in order to gain an understanding of the breeding success of this species in response to the wind farm development. This included recording any changes in flight behaviour and activity of resident breeding pairs, as a result of the proposed wind farm.

Table 1. Previous surveys completed by EBS Ecology at the Snowtown Wind Farm Stage 2 proposal.

EBS Report Name	Field work completed	Targeted survey	Report completed
Snowtown Wind Farm Stage 2 Ecological Assessment	24th – 26th September 2008	Ecological Assessment	November 2008
Snowtown Wind Farm Stage 2 – Flora and Fauna Targeted Assessment and Transmission Line Assessment	July 2009	Follow up survey to September 2008 survey & transmission line assessment	6 October 2010
Snowtown Wind Farm Stage 2 Pygmy Blue-tongue Lizard Presence / Absence Survey	16th - 17th November 2009	Pygmy Blue-tongue Lizard	13 January 2010
Snowtown Wind Farm Stage 2 Transmission Line Survey – Option 3	2nd December 2009	Supplementary to September 2008 and October 2009 reports	5 January 2010
Snowtown Wind Farm Stage 2 Native Vegetation Clearance Report	December 2010 (additional changes assessed)	Infrastructure layout changed; site visit required to map sites outside previous boundary	28 January 2011
Wedge-tailed Eagle Monitoring at Snowtown Stage 2 Wind Farm	27th & 29th July 2010, 27th October 2010 & 21st December 2010	Wedge-tailed Eagle nest checks	15 March 2011

3 METHODS

3.1 Database searches

A number of sources have been consulted in order to investigate whether threatened flora and fauna occur within the proposed Stage 2 Snowtown Wind Farm. Species of national conservation significance listed under the Commonwealth *Environment Protection and Biodiversity Conservation Act 1999* (EPBC Act) were determined, as were species of state conservation significance listed under the *National Parks and Wildlife Act 1972* (NPW Act).

Vegetation mapping of the site was investigated (DEH 2008) as well as topographical maps and aerial photography of the site. The EPBC online database was searched to identify any species of national conservation significance which might have occurred within the site. A search of the flora and fauna databases, maintained by the Department of Environment and Natural Resources (DENR) and the Southern Australian (SA) Museum, have been undertaken for an site within a 10 km radius of the Snowtown project site (EBS 2008). Other sources, such as the Biodiversity Plan for the Northern Agricultural Districts (Graham *et al* 2001) have been utilised. Documents relating to threatened species and communities within the region were reviewed such as the Recovery Plan for the Pygmy Blue-tongue (*Tiliqua adelaidensis*) (Milne et al 2000) and the EPBC Policy statement on the status of Peppermint Box (*Eucalyptus odorata*) Grassy Woodlands and Iron-grass Natural Temperate Grasslands (DEWR 2007).

3.2 Field surveys

Previous field surveys have been undertaken by EBS at the proposed Stage 2 site in September 2008 (EBS 2008), July 2009 (EBS 2009), December 2009 (EBS 2010a), December 2010 and January 2011 (Table 1). During these surveys vegetation associations were mapped and assigned condition ratings. The majority of the wind farm site was assessed during the 2008 survey (EBS 2008), however additional surveys were also completed when subsequent infrastructure layout changes were made.

Plant species and vegetation communities present were recorded, and the condition and significance of vegetation present was noted. All fauna species observed were recorded, including a Level One survey (AusWind 2006) for bats and birds. A Level 1 bird and bat study was undertaken to identify any significant bird/bat issues, to determine the possible approval requirements under Commonwealth and State legislation, and to identify any constraints and/or the need for more detailed surveys of the site. The presence of fauna habitat was recorded with particular focus on threatened species as well as priority species such as the Wedge-tailed Eagle.

3.2.1 Flora

General observations of vegetation associations present within the site were recorded and mapped during the survey. A vegetation assessment included recording:

- Changes in vegetation associations along the alignment which were documented by taking GPS waypoints. A change in vegetation association is recorded when a change in the dominant species is noted.

- Condition ratings were applied to each vegetation association recorded. The methodology used for the assigned condition was adapted from Stokes et al (1998) (EBS 2008).

- Species lists (native and exotic flora) were compiled for each vegetation association.

- Sites considered to contribute moderate-high biodiversity value to the local environment were recorded as sites best avoided.

- Representative photos were taken of each vegetation association, or of any sites of particular interest for reporting purposes.

All potential *Lomandra effusa* (Iron Grass) Grassland was identified by EBS Ecology (EBS 2008; 2009). The community was assessed against attributes listed in the '*Iron-grass Natural Temperate Grassland of South Australia EPBC Act Policy Statement 3.7*' to determine whether they qualified as the critically endangered listed community (DEWR 2007).

3.2.2 Transmission Line Assessment

- Transmission alignment routes were first driven to confirm the exact alignment. Sites traversing public land were not accessed and public roads were followed. The actual route driven and non-accessible sites were delineated on aerial photography

- Vegetation within transmission lines was assessed starting from the eastern end and terminated at Barunga Gap (western end)

- For each transmission line, vegetation within the road verge on both sides of the road was assessed. Notes on the environmental landscape bordering the road verge were also recorded.

3.2.3 Fauna

Sightings and general observations of tracks, traces and habitat of native and exotic fauna were recorded on site. Potential nesting/roosting habitat within woodlands, grasslands, tree hollows, loose rocky sites and creek lines were recorded across the site.

The bird and bat assessment for the Stage 2 Wind Farm project was undertaken in line with AusWind Best Practice Guidelines and the Wind Farms and Birds: Interim Standard for Risk Assessment documents (Auswind 2006). A Level 1 bird and bat study was undertaken to identify any significant issues and to determine the possible approval requirements under Commonwealth and State legislation.

The proposed Stage 2 site was surveyed for birds at several times of the day including early morning, during the middle of the day and late afternoon. Bird surveys were conducted across a total of 32 survey sites in six different habitat types (EBS 2008). This included the *Allocasuarina verticillata* Low Woodlands, and mixed *Eucalypt* Low Woodlands which occurred in the gullies that run off either side of the major ridge line, and on the lower slopes of the hills (Figure 2 to Figure 4). Native *Austrostipa spp. / Austrodanthonia* sp. Grasslands, *Lomandra ssp*. Grasslands and Exotic Grasslands on the ridge tops and hills were also surveyed for birds. The *Eucalyptus camaldulensis* (Red Gum) dominated creek lines in the foothills and valleys to the east of the ridge line were also covered in the 2008 survey. A single survey was also conducted at Bumbunga Lake to determine its use by waterbirds and waders (EBS 2008).

Details on raptor nests were recorded including location, dimensions, signs of activity and nearby bird sightings and behaviours (EBS 2008; 2009). Photographs at each nest location were taken where possible. Additionally, all birds noted opportunistically during the course of moving around the site were identified and GPS coordinates of their location recorded.

Eleven Wedge-tailed Eagle nest sites were re-visited across additional surveys in 2009 and 2010, to determine their breeding status and the presence of any undetected nests. Any remaining un-surveyed woodland habitat within the southern section of Stage 2 was searched on foot to locate nests (EBS 2009). This included searching for medium-large sized trees where nest sites would be located.

AnaBat detectors were set up at several locations across the site for (EBS 2008). At each location, the AnaBat recorded bat calls from late afternoon until early the following morning to determine bat species present within the site. AnaBats were placed in sites thought to be of suitable habitat for bats or that bats may frequent when feeding. Woodland sites seen to contain small hollows for roosting and 'fly-way' tunnels through the canopy were targeted for bat call activity.

For locations of survey points for bats and birds, refer to Figure 3a and 3b (EBS 2008).

All Stage 2 proposed turbine locations and their associated access tracks (including infrastructure corridors) were assessed for preferred Pygmy Blue-tongue Lizard and Flinders Worm-lizard habitat (EBS 2008, 2009 and 2010a). This included identifying potential habitat areas and determining presence/absence within identified potential habitat. Spider holes present within native and exotic grasslands were checked and ground substrate for habitat suitability was assessed. For potential PBT habitat and areas surveyed, refer to Figure 1 in the *Snowtown Wind Farm Stage 2 – Pygmy Blue-tongue Presence / Absence Survey* Report (EBS 2010a).

3.3 Clearance calculations

Calculations are based on the previous surveys undertaken by EBS (EBS 2008, 2009 and 2010c), and the final adjustments in January 2011. Clearance estimates are based on the figures provided by

TrustPower for each infrastructure component, as shown in Table 2. Calculation of the SEB off-set area is included in *Snowtown Stage 2 Wind Farm Native Vegetation Clearance Report* (EBS, 2012).

Table 2. Clearance area estimates for the infrastructure components.

Infrastructure component	Area
WTG + hardstand	50 m x 30 m each = 0.15 ha
Access tracks	10 m width x length
Underground 33kV cable alignment	5 m width x length (single cable alignment) + 1 m for each additional cable
Overhead 33kV cable alignment	4 m wide + 1 m for each additional line
Transmission line pole hardstands	5 m x 5 m = 0.0025 ha, located at 250 m intervals along the length of the route
On-site substation	150 m x 200 m = 3 ha
Switching station	160 m x 82 m = 1.31 ha

3.4 SEB calculations

The required SEB was calculated using *Guidelines for the Native Vegetation Significant Environment Benefit Policy for the clearance of scattered trees* (DWLBC 2007) and the Formula for Calculating Significant Environment Benefit Payment (developed by DENR, formerly DWLBC).

SEB ratios were assigned using the criteria set out in Table 3.

Table 3. Vegetation condition descriptions used to apply appropriate SEB ratio.

Condition	SEB Ratio	% total indigenous cover	Native Vegetation Council SEB Ratio Interim Policy	Understorey condition description	Indicators
5 (Very Poor)	0:1	<10%	Any potential clearance consists of lopping of overhanging limbs only &/or no indigenous understorey present.	Complete or almost complete destruction of understorey (by grazing &/or introduced plants). The understorey* consists mainly of alien species.	Vegetation structure no longer intact (e.g. removal of one or more vegetation strata). Scope for regeneration, but not to a state approaching good condition without intensive management. Dominated by very aggressive weeds. Partial or extensive clearing (> 50% of area). Evidence of heavy grazing (tracks, browse lines, species changes, no evidence of soil surface crust).
	1:1	10-19%	Areas are dominated by introduced species. Native vegetation is largely reduced to scattered trees, indigenous understorey flora reduced to scattered clumps and individual plants.		
	2:1	20-29%	Weeds dominate, scattered trees with indigenous understorey reduced to scattered clumps and individual plants.		
4 (Poor)	3:1	30-39%	Mostly intact overstorey vegetation but there is still considerable weed infestation amongst the understorey flora.	Heavy loss of plant species. The understorey* consists predominately of alien species, although a small number of natives persist.	Vegetation structure substantially altered (e.g. one or more vegetation strata depleted). Retains basic vegetation structure or the ability to regenerate it. Very obvious signs of long-term or severe disturbance. Weed dominated with some very aggressive weeds. Partial clearing (10 – 50% of area). Evidence of moderate grazing (tracks, browse lines, soil surface crust extensively broken).
	4:1	40-49%	Mostly intact overstorey vegetation but there is still considerable weed infestation amongst the understorey flora.		
3 (Moderate)	5:1	50-59%	Mostly intact, weed-free areas small, indigenous vegetation dominant.	Moderate loss of plant species. Substantial invasion of aliens resulting in significant competition, but native understorey* persists; for example, may be a low proportion of native species and a high native cover, or a high proportion of native species and low native cover.	Vegetation structure altered (e.g. one or more vegetation strata depleted). Most seed sources available to regenerate original structure. Obvious signs of disturbance (e.g. tracks, bare ground). Minor clearing (<10% of area). Considerable weed infestation with some aggressive weeds. Evidence of some grazing (tracks, soil surface crust patchy).
	6:1	60-69%	Mostly intact overstorey vegetation with moderate but not severe weed infestation amongst the understorey flora.		
2 (Good)	7:1	70-79%	Mostly intact overstorey and understorey vegetation, weed infestation is moderate to low, but the original vegetation is still dominant.	Understorey only slightly modified. High proportion of native species and native cover in the understorey*; reasonable representation of probable pre-European vegetation.	Vegetation structure intact (e.g. all strata intact). Disturbance minor, only affecting individual species. Only non-aggressive weeds present. Some litter build-up.
	8:1	80-89%			
1 (Excellent)	9:1	> 89%	Diverse vegetation with very little weed infestation.	Understorey largely undisturbed, minimal loss of plant species diversity. Very little or no sign of alien vegetation in the understorey*; resembles probable pre-European condition.	All strata intact and botanical composition close to original. Little or no signs of disturbance. Little or no weed infestation. Soil surface crust intact. Substantial litter cover.
	10:1		Diverse vegetation with no weed infestation.		

*Or all strata if the upper and lower strata are difficult to distinguish
Adapted from '*Guide to Roadside Vegetation Survey Methodology for South Australia*', (Stokes *et al.* 1998) and '*Guidelines for a Native Vegetation Significant Environmental Benefit Policy*', (DWLBC 2005).

4 RESULTS

4.1 EPBC and Protected Matters search and Biological Database of South Australia (BDBSA) search

4.1.1 Threatened flora species

Four nationally threatened flora species were highlighted by the EPBC search tool as potentially occurring within the Snowtown project site (Appendix 1) (EBS 2008). These included the endangered *Caladenia macroclavia* (Large-club Spider-orchid), endangered *Caladenia tensa* (Greencomb Spider-orchid, Rigid Spider-orchid), vulnerable *Olearia pannosa ssp. pannosa* (Silver Daisy-bush) and vulnerable *Swainsona pyrophila* (Yellow Swainson-pea) (EBS 2008). No nationally threatened flora species have been recorded at the proposed Stage 2 Snowtown Wind Farm.

The DEH database search revealed 16 threatened flora species that were recorded within 10 kms of the project site (Appendix 2) (EBS 2008). No state threatened flora species have been recorded at the proposed Stage 2 Snowtown Wind Farm.

4.1.2 Threatened fauna species

Four nationally threatened fauna species were highlighted by the EPBC search tool as potentially occurring within the Snowtown project site (EBS 2008). These included the vulnerable Flinders Worm-lizard (*Aprasia pseudopulchella*), vulnerable Plains-wanderer (*Pedionomus torquatus),* vulnerable Australian Painted Snipe (*Rostratula australis)* and endangered Pygmy Blue-tongue (*Tiliqua adelaidensis*). None of these species have been recorded at the proposed Stage 2 Snowtown Wind Farm.

Additionally, seven migratory bird species were highlighted as possibly occurring in the site, including terrestrial, wetland and marine based species (Appendix 3) (EBS 2008). One out of the seven species were recorded on site: the Rainbow Bee-eater (*Merops ornatus*).

The DENR/SA Museum database search revealed 15 threatened fauna species that were recorded within 10 kms of the project site (Appendix 4) (EBS 2008). Two out of the 15 fauna species listed were recorded within the proposed Stage 2 Snowtown Wind Farm: the Elegant Parrot (*Neophema elegans*) and Peregrine Falcon (*Falco peregrinus*).

4.1.3 Threatened ecological communities

Two nationally threatened vegetation communities were highlighted by the EPBC search tool as potentially occurring within the Snowtown project site (EBS 2008). Both were listed as critically endangered:

- Iron-grass (*Lomandra spp*.) Grassland of South Australia, and

- Peppermint Box (*Eucalyptus odorata*) Grassy Woodland of South Australia.

Patches of *Lomandra* spp. have been recorded within the proposed Stage 2 Snowtown Wind Farm (refer to Section 4.2 for more information).

4.2 Field survey

4.2.1 Flora results

Native and exotic vegetation within the proposed Stage 2 Snowtown Wind Farm was assessed; vegetation associations were determined and each association was given a condition rating. The transmission line proposed as part of Stage 2, running east-west, was also surveyed for native and exotic species and given condition ratings.

4.2.1.1 Flora species and vegetation associations

Twelve vegetation associations have been recorded within the proposed Stage 2 Snowtown Wind Farm (Figure 2, 3 and 4). A description, condition rating and the number of hectares recorded for each association is listed in Table 4. Cropping Land and Exotic Grassland (grazing land) were the two dominant vegetation associations recorded across the proposed Stage 2 site, with 3190 ha and 2992 ha recorded respectively. *Gahnia sp.* (Sword Sedge) Grassland was observed in low abundance, with 0.3 ha recorded (Table 4).

The majority of vegetation associations were encountered along the corridors surrounding the Stage 2 development sites, however some associations existed between the corridors (such as *Eucalyptus* and *Allocasuarina* Woodlands). For detailed descriptions of each vegetation association refer to *Snowtown Wind Farm Stage 2 – Ecological Assessment* (EBS 2008) and *Snowtown Stage 2 Wind Farm Native Vegetation Clearance Report* (EBS 2010c). A summary of the woodland associations are described below.

Table 4. Twelve vegetation associations were recorded at the Snowtown Wind Farm Stage 2 proposal.

Veg Assoc. No.	Association Description	Hectares	Condition rating
1	*A. verticillata* Low Woodland +/- *B. spinosa* +/- *L. viscidum* +/- *L*. spp.	442	0:1 - 5:1
2	*Austrostipa* spp. +/- *Austrodanthonia* sp. Grassland +/- *Bursaria spinosa*	650	2:1 - 5:1
3	*Callitris* sp. Woodland	11	
4	Cropping land	3190	0:1
5	*Eucalyptus camaldulensis* Woodland	29	
6	*Eucalyptus oleosa* +/- *E. gracilis* +/- *E. porosa* Low Woodland	183	0:1 - 4:1
7	Exotic grassland (grazing land)	2992	0:1 - 4:1
8	*Gahnia* sp. Grassland	0.3	5:1
9	*Lomandra effusa* grassland	75	1:1 - 4:1
10	*Lomandra* spp. / *Austrostipa* spp. / *Austrodanthonia* sp. Grassland	377	1:1 - 5:1
11	*Nitraria billardierei* Shrubland	40	
12	*Themeda triandra* / Austrod*anthonia* sp. grassland	25	4:1

4.2.1.2 Woodland associations

Allocasuarina verticillata* Low Woodland +/- *Bursaria spinosa* +/- *Lepidosperma viscidum

This association was found throughout the proposed Stage 2, mainly in gullies which run from the main ridge out to the east and west. Drooping Sheoak (*Allocasuarina verticillata*) was the dominant species, however *Bursaria spinosa* ssp. *spinosa* (Sweet Bursaria) was commonly found in this association. The perennial understorey was limited, consisting mainly of exotic species, although a number of natives were known to persist in this association. One particular area was in good condition and had a thick understorey of *Lepidosperma viscidum* (Sticky Sword-sedge).

***Eucalyptus oleosa* +/- *Eucalyptus gracilis* +/- *Eucalyptus porosa* Low Woodland**

These low woodlands were found along ridges and gullies throughout the proposed Stage 2 site and in vast areas along the bottom of the main ridgeline. A mixture of *Eucalyptus* species were found throughout this association, however *Eucalyptus oleosa* (Red Mallee) was often the dominant species. The understorey was usually limited, but in some instances contained a thick shrub layer of *Bursaria spinosa* ssp*. spinosa* (Sweet Bursaria). The state rare *Cryptandra sp. Long hypanthium* (Long-flower Cryptandra) was found within this association.

***Eucalyptus camaldulensis* Woodland**

This association was only briefly visited during the 2008 bird survey (EBS 2008) and was located outside of the immediate Stage 2 development corridor (EBS 2010c). The association was dominated by *Eucalyptus camaldulensis* var. *camaldulensis* (Red Gum) and followed creek lines running east and west of the main ridgeline. Figure 4 shows that this association is situated east of the proposed string of turbines, spread along the main ridgeline.

***Callitris* spp. Woodland**

This association is situated approximately 1 km west of the proposed turbine string WTG13-16 (Figure 4), and is outside of the proposed development corridor of the Stage 2 area.

4.2.1.3 Grassland associations

Out of the 12 vegetation associations, five were recorded as grassland (Figures 5 to Figure 7). These grassland associations were in good condition in terms of species diversity and density of plants, however they also contained many exotic grasses and herbs. A summary of the five grassland associations are provided below:

Austrostipa* ssp. / *Austrodanthonia* sp. Grassland +/- *Bursaria spinosa

Austrostipa spp. (Spear grasses) and *Austrodanthonia* sp. (Wallaby grasses) were co-dominant in this association which were scattered throughout the proposed Stage 2 site. Whilst vast areas of this

association still remain, other native flora species were present. These grasslands were also heavily infested with exotic species such as *Avena barbata* (Wild Oats) and *Hordeum vulgare* (Barley Grass).

Lomandra spp. / *Austrostipa* ssp. / *Austrodanthonia* sp. Grassland

A site of *Lomandra spp*. Grassland was considered to be of moderate condition during the 2008 survey (EBS 2008). Up to four species of *Lomandra* (Iron Grass) were found within this association, in addition to a number of *Austrostipa* species (Spear Grass), *Austrodanthonia* species (Wallaby Grass), Sticky Sword-sedge (*Lepidosperma viscidum*) and Sweet Bursaria (*Bursaria spinosa*) (EBS 2008).

Lomandra effusa Grassland

Patches of this vegetation association were found throughout the proposed Stage 2 site (Figure 2 to Figure 4). Distinct from the main *Lomandra* association, these patches were dominated by *Lomandra effusa* (Scented Mat-rush). Few other native species were found in this association, aside from exotic pasture grasses and a few *Austrostipa* species and *Austrodanthonia* species.

The *Lomandra effusa* Grassland areas do not qualify as the critically endangered listed community under the EPBC Act. While these patches of *L. effusa* Grassland do not qualify as a threatened community, native grasslands are very poorly conserved within South Australia and therefore any degraded grassland offers biodiversity value to the local area. A large patch of *L. effusa* Grassland was present along the access track of WTG35-WTG37 (Figure 3); grassland surrounding WTG37 is of particular concern, where the access track extends through to Exotic Grassland and Cropping Land, and connects with the indicative underground cable route.

Gahnia lanigera Grassland

This association was found in small patches and included a distinct variation in vegetation cover. *Gahnia lanigera* (Black Grass Saw-sedge) is a species that has been flagged as being of possible conservation significance; however it is rated as ‘not yet assessed’. A number of native species occurred within this association including *Glycine* sp. (Glycine), *Stackhousia monogyna*, *Vittadinia megacephala* (Giant New Holland Daisy) and *Oxalis perennans* (Native Sorrel).

Exotic Grassland (grazing land)

This association was commonly found across the site, consisting of pastoral species and weeds such as *Avena barbata*, *Hordeum vulgare* (Barley Grass), *Salvia verbenaca* (Wild Sage) and *Arctotheca calendula* (Capeweed). Few native plants were present in this association, however *Austrodanthonia* spp. were scattered throughout the association and isolated patches of native species were present including *Allocasuarina verticillata* (Drooping Sheoak), *Lomandra spp*. (Iron grasses) and *Bursaria spinosa ssp. spinosa*. Several small herbaceous native species were found in these areas including *Stackhousia monogyna* (Creamy Candles), *Ptilotus spathulatus forma spathulatus* (Pussy Tails), *Arthropodium sp* (Chocolate Lilly), *Vittadinia gracilis* (Wooly New Holland Daisy), *Vittadinia megacephala* (Giant New Holland Daisy) and *Hydrocotyle laxiflora* (Stinking Pennywort).

***Themeda triandra / Austrodanthonia* sp**.

The *Themeda triandra* / *Austrodanthonia* sp. Grassland Association existed within small patches within the proposed Stage 2 Snowtown wind farm (Figure 6). Kangaroo Grass (*Themeda triandra*) dominated the small association.

4.2.1.4 Vegetation association condition ratings

Each of the 12 vegetation associations were assigned a condition rating (Figures 5, 6 and 7); they ranged from very poor (condition 5) to moderate (Condition 3) (Appendix 5). The invasion of exotic flora species throughout the site was considerable and largely due to historic agricultural and pastoral activities, resulting in a highly modified landscape.

Much of the proposed Stage 2 windfarm site was assigned a very poor (Condition 5) category (Figures 5, 6 and 7). The project site consisted mainly of Exotic Grasslands and Cropping Land, where native understorey species were largely non-existent. However, the occasional isolated native understorey species were present in this association, represented by patches of Sweet Bursaria (*Bursaria spinosa*), Creamy Candles (*Stackhousia monogyna*), Stinking Pennywort (*Hydrocotyle laxiflora*) and Pussy-tails (*Ptilotus spathulatus f. spathulatus*) (EBS 2008).

These small pockets of native understorey (within the Condition 5 areas) would commonly exist in rock crevices, under logs or beneath isolated Drooping Sheoaks (*Allocasuarina verticillata).*

The woodland associations mainly fell into the poor (condition 4) category, owing to a small number of species persisting in the understory layers (Figures 8, 9 and 10) (EBS 2008). Small areas were assigned as moderate (Condition 3), which possessed a higher number of native species in the understorey layer. For example, *Allocasuarina* woodland which had a dense understorey of Sticky Sword-sedge (*Lepidosperma viscidum)* (EBS 2008). This area encompasses the proposed turbines WTG35 – WTG37, which appear to fall within the patches of Moderate condition woodland.

4.2.1.5 Threatened flora species

The State rare Long-flower Cryptandra (*Cryptandra* sp *Long hypanthium*) was detected within the Snowtown Stage 2 in several sites of *Eucalyptus* Low Woodlands, however a few isolated plants were also found throughout the proposed Stage 2 site (EBS 2008) (Figure 11).

A patch of *Gahnia lanigera* (Black Grass Sword-sedge) grassland was recorded in moderate condition during the 2008 survey (EBS 2008). In addition to the high density of *Gahnia lanigera*, a number of other native species were recorded in the patch, including Glycine (*Glycine* sp.)*,* Creamy Candles (*Stackhousia monogyna*), Giant New Holland Daisy (*Vittadinia megacephala*) and Native Sorrel (*Oxalis perennans*) (EBS 2008). Unfortunately, a graded access track associated with a tower at Bumbunga Hill had already been constructed on the edge of this association. The road spoil had encroached on the

patch, burying some plants, and it was expected that plants in the patch may be affected by dust from the unsealed track (EBS 2008).

The *Allocasuarina verticillata* (Drooping Sheoak) Grassy Low Woodland is listed as a threatened ecosystem of South Australia (DEH Provisional list 2005). The *Allocasuarina verticillata* Low Woodland +/- *Bursaria spinosa* +/- *Lepidosperma viscidum* Association was scattered on the eastern slopes of the southern extent of the proposed Stage 2 (Figure 2); no indicative access tracks are proposed within these areas. The *Allocasuarina verticillata* Low Woodland Association is also mapped running parallel with the access track of WTG35 – WTG37 (Figure 3); indicative access tracks are proposed through this string of turbines. Lastly, the *Allocasuarina verticillata* Low Woodland Association is mapped in scattered areas along the western spine of the northern extent of the proposed Stage 2 site (Figure 4); no indicative access tracks are proposed within these areas.

4.1.2.6 Transmission Lines

Native and exotic vegetation present along the east-west transmission line were assessed. Eleven vegetation associations were recorded during the 2009 survey, the majority of which was defined as cropping land (EBS 2009). The cropping land was recorded as having very poor (Condition 5) condition rating (Figure 12 and 13). An additional transmission line (option 3) was also assessed (EBS 2010b); this survey followed an ecological assessment of Snowtown Wind Farm Stage 2 in September 2008 (EBS 2008) and two transmission line assessments during October 2009 (EBS 2009).

A total of ten vegetation associations and large areas of cropping land were defined within the proposed transmission line alignment (EBS 2010b). The dominant vegetation across the areas surveyed was cropped paddocks. Remnant vegetation was confined to the following areas of the proposed alignment:

- Several sections of roadside reserves which contained Mallee, Shrubland and Grassland associations (Very Poor to Moderate condition, SEB score 0:1 - 6:1).
- A low-lying area which supports a *Nitraria billardierei* (Nitre Bush) Open Shrubland (Poor to Moderate condition, SEB score 4:1 - 6:1) and *Tecticornia pergranulata* ssp. *pergranulata* (Black-seed Samphire) Low Shrubland (Moderate condition, SEB score 6:1).
- A section of *Eucalyptus porosa* (Mallee Box) Very Open Mallee (Moderate condition, SEB score 6:1).

The vegetation associations present within the transmission line corridor are shown in Figure 12 and the condition of vegetation within the transmission line corridor is shown in Figure 13. A summary of each vegetation association can be found in the *Snowtown Stage 2 Wind Farm Native Vegetation Clearance Report* (EBS 2010c).

No national or state conservation rated flora species were detected within the proposed transmission line alignment during the 2009 survey (EBS 2010b). Full flora species lists are provided with the previous reports.

Weed species

A total of 27 weed species were detected within the proposed transmission line alignment during the 2009 survey (EBS 2010b). Weed species detected which are declared under the *Natural Resources Management Act, 2004* included *Asphodelus fistulosus* (Onion Weed), *Cynara cardunculus* ssp. *flavescens* (Artichoke Thistle), *Echium plantagineum* (Salvation Jane), *Lycium ferocissimum* (African Boxthorn), *Marrubium vulgare* (Horehound), *Rosa canina* (Dog Rose) and *Solanum elaeagnifolium* (Silver-leaf Nightshade).

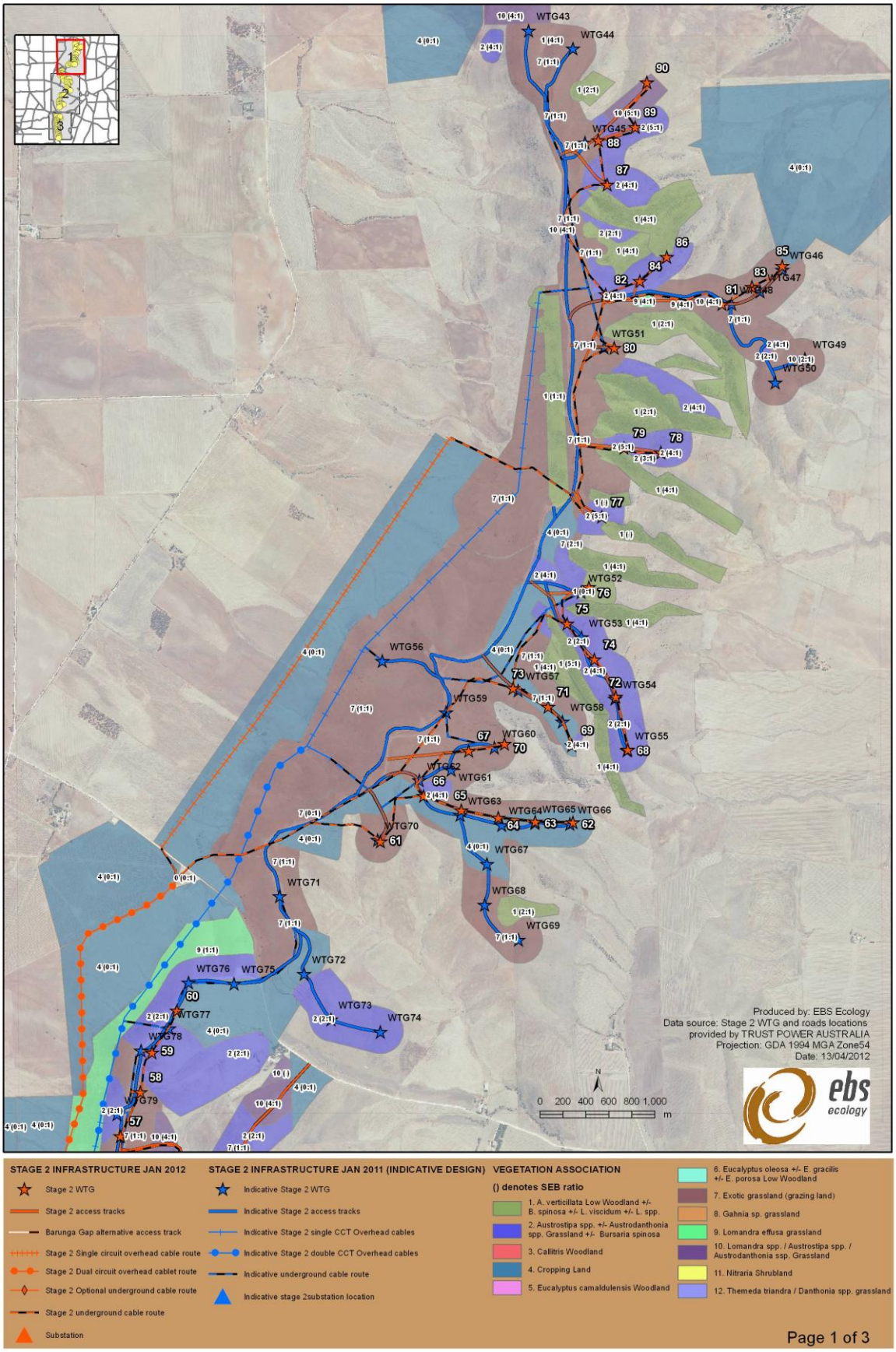

Figure 2. Vegetation associations identified within the survey site (northern site).

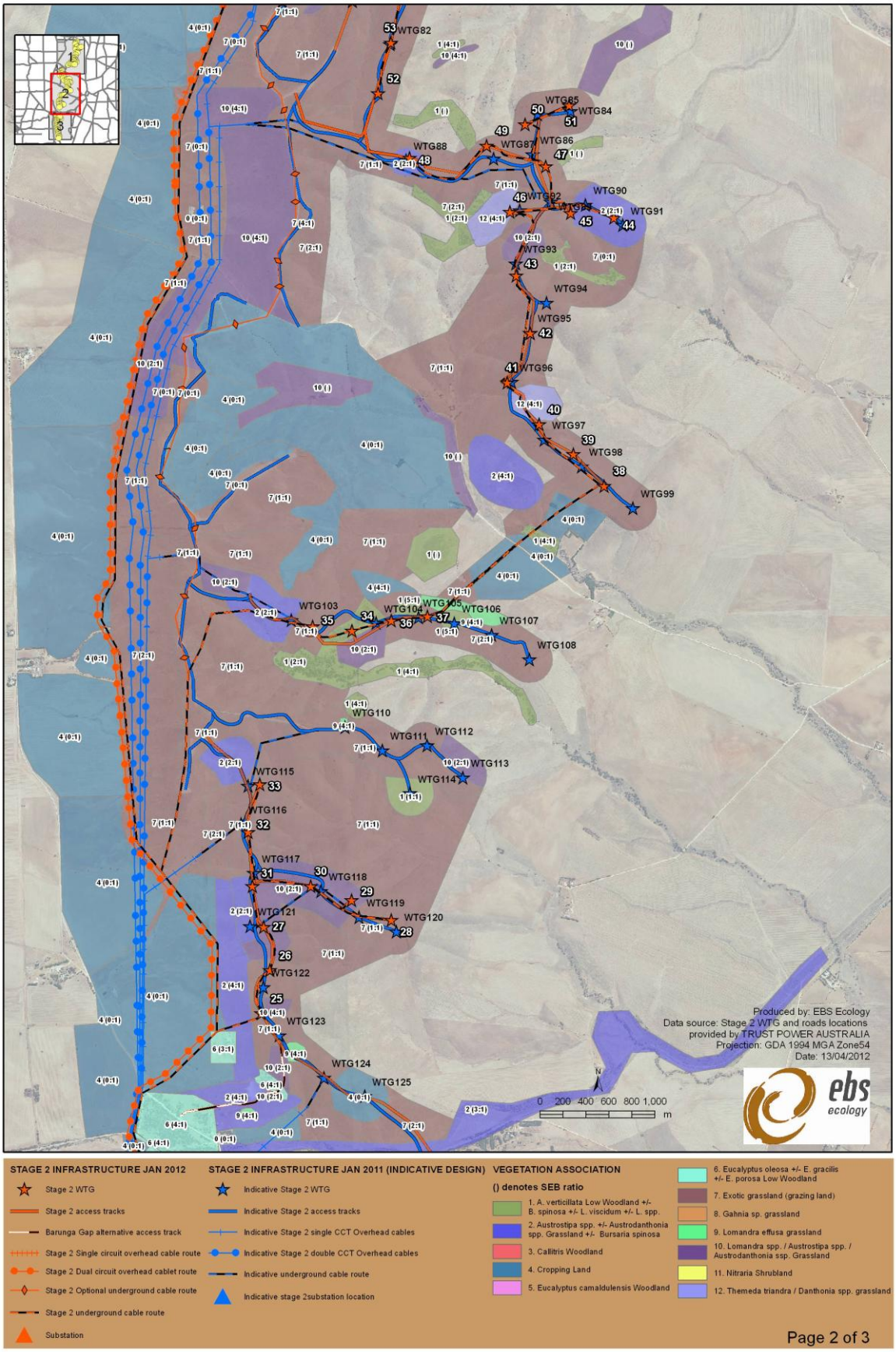

Figure 3. Vegetation associations identified within the survey site (middle site).

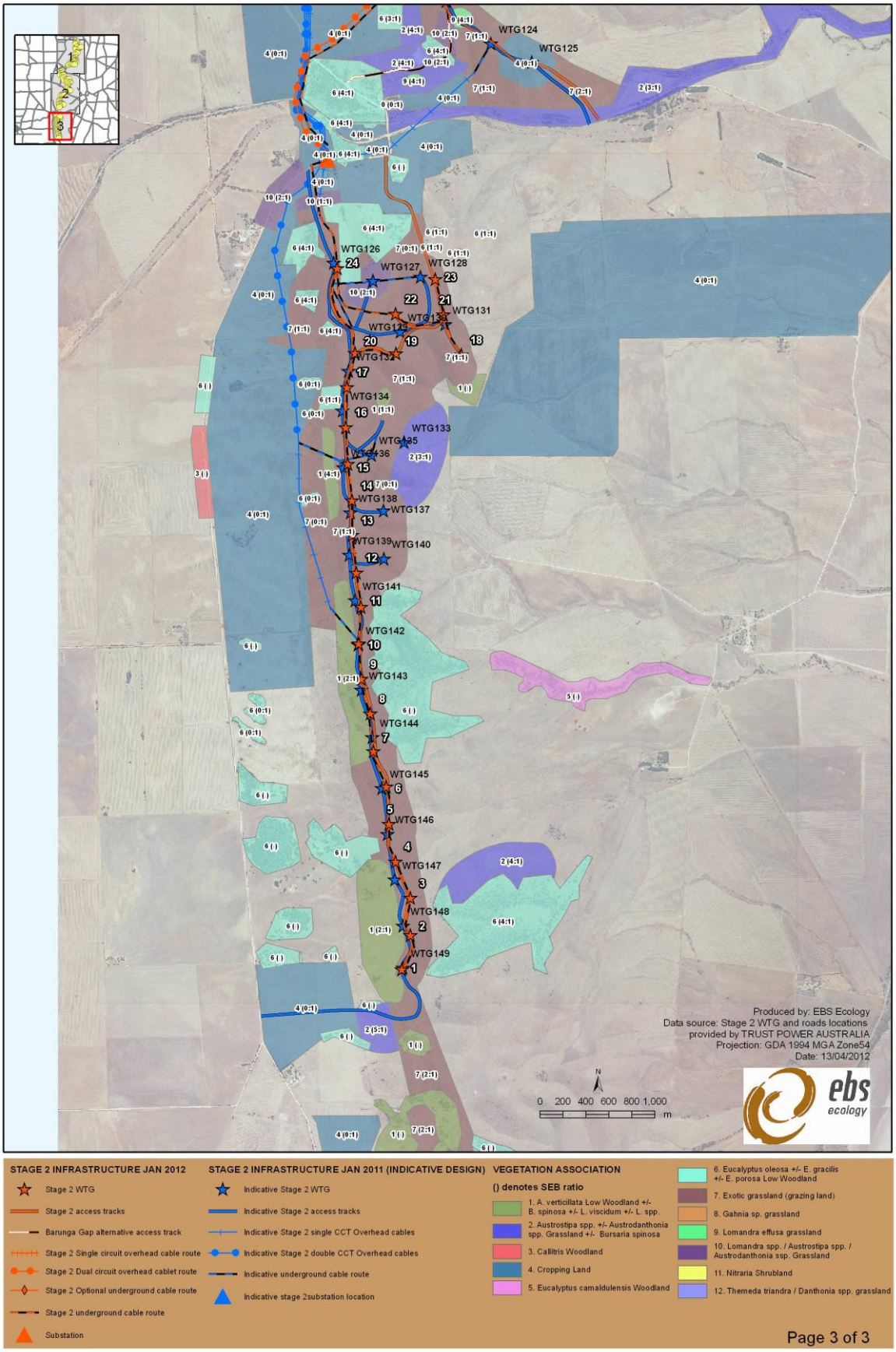

Figure 4. Vegetation associations identified within the survey site (southern site).

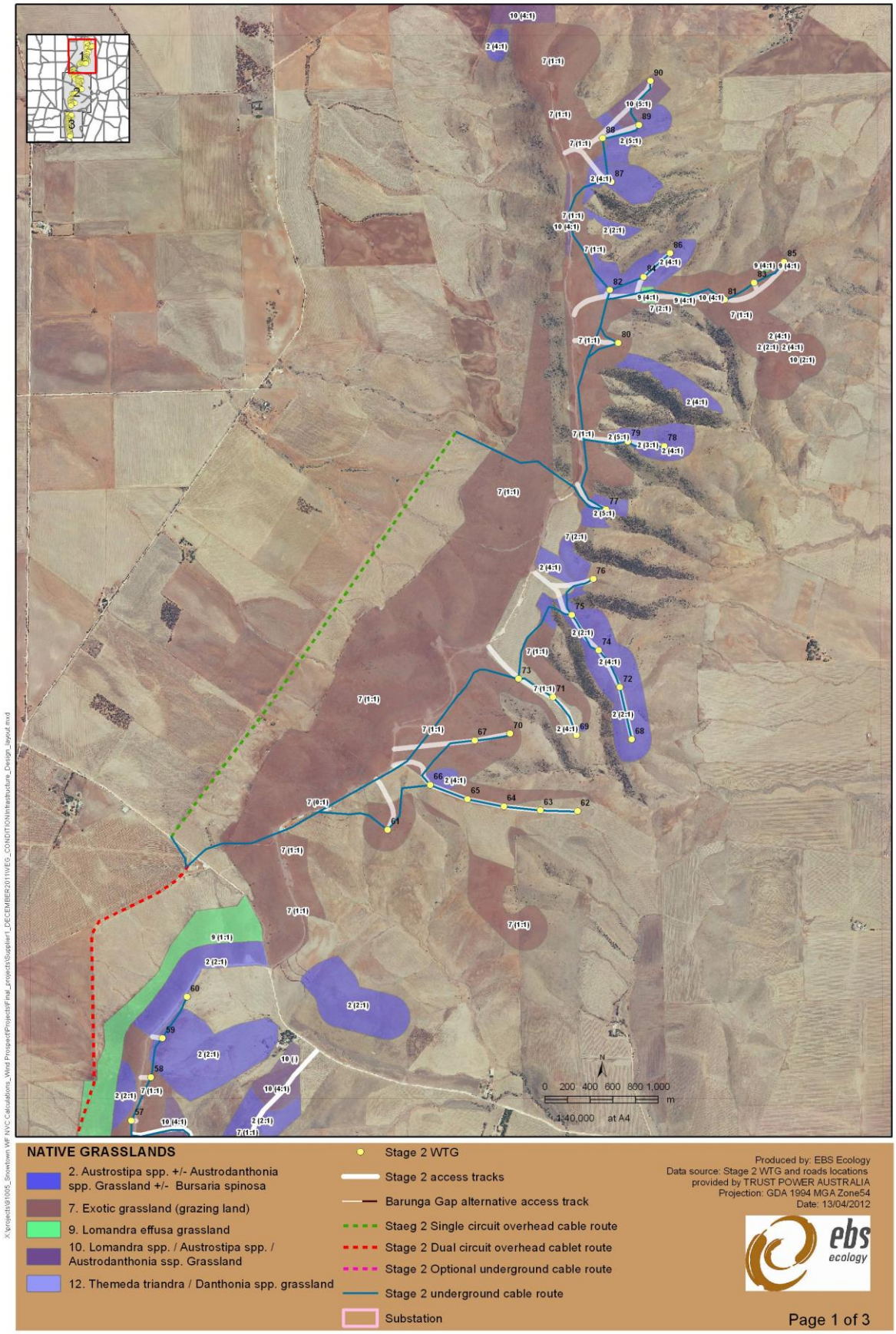

Figure 5. Native grasslands identified within the survey site (northern site).

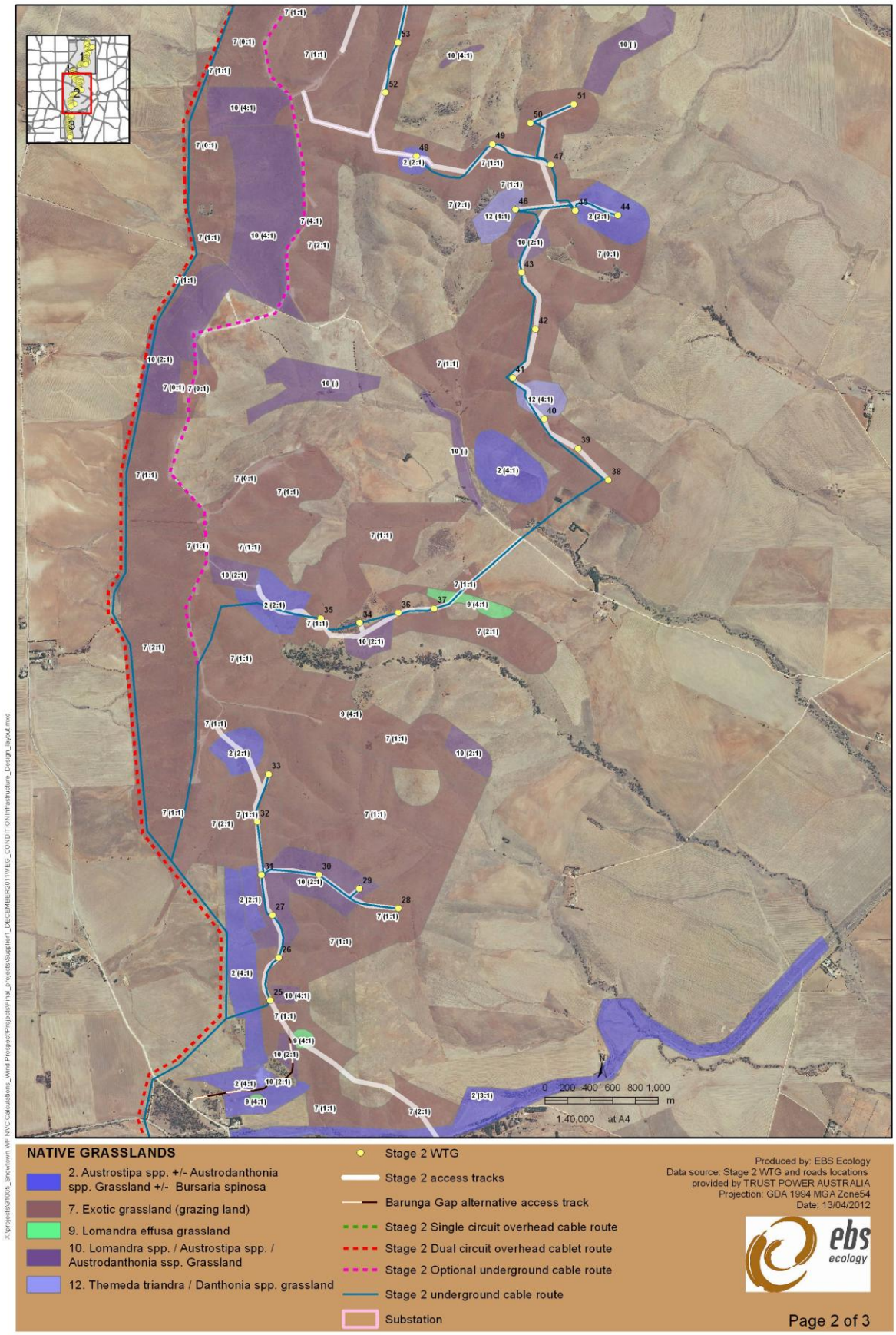

Figure 6. Native grasslands identified within the survey site (middle site).

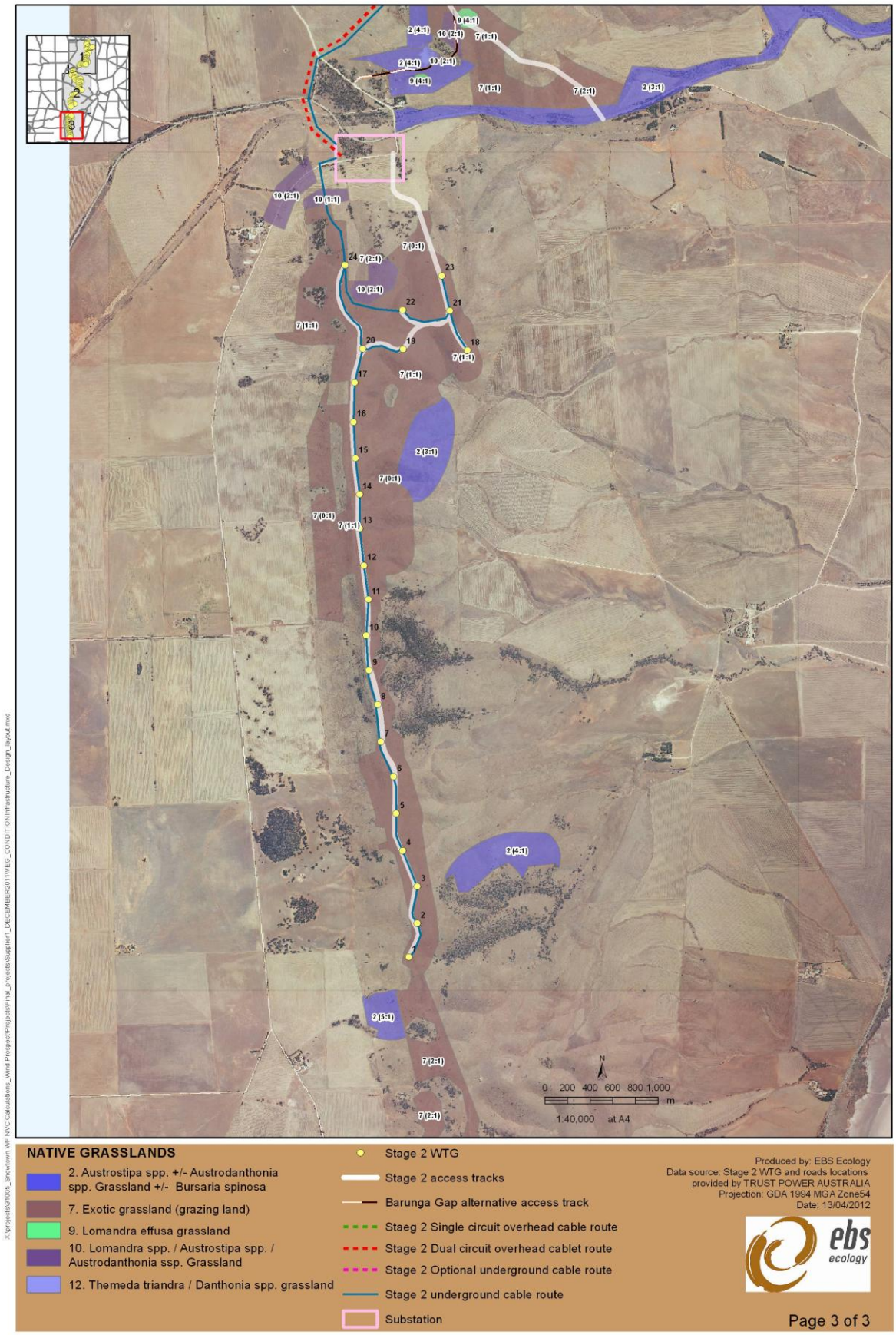

Figure 7. Native grasslands identified within the survey site (southern site).

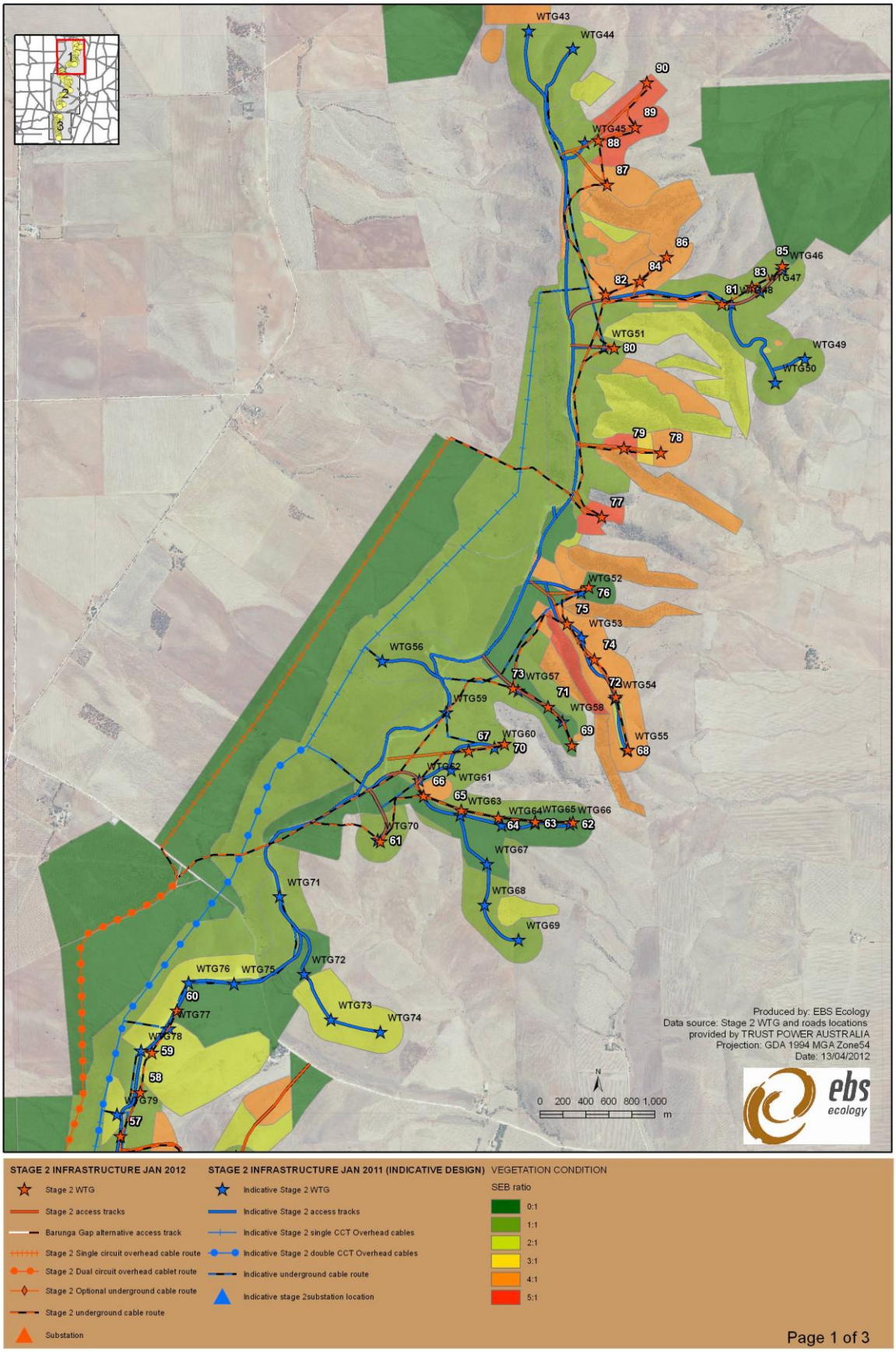

Figure 8. Vegetation conditions identified within the survey site (northern site).

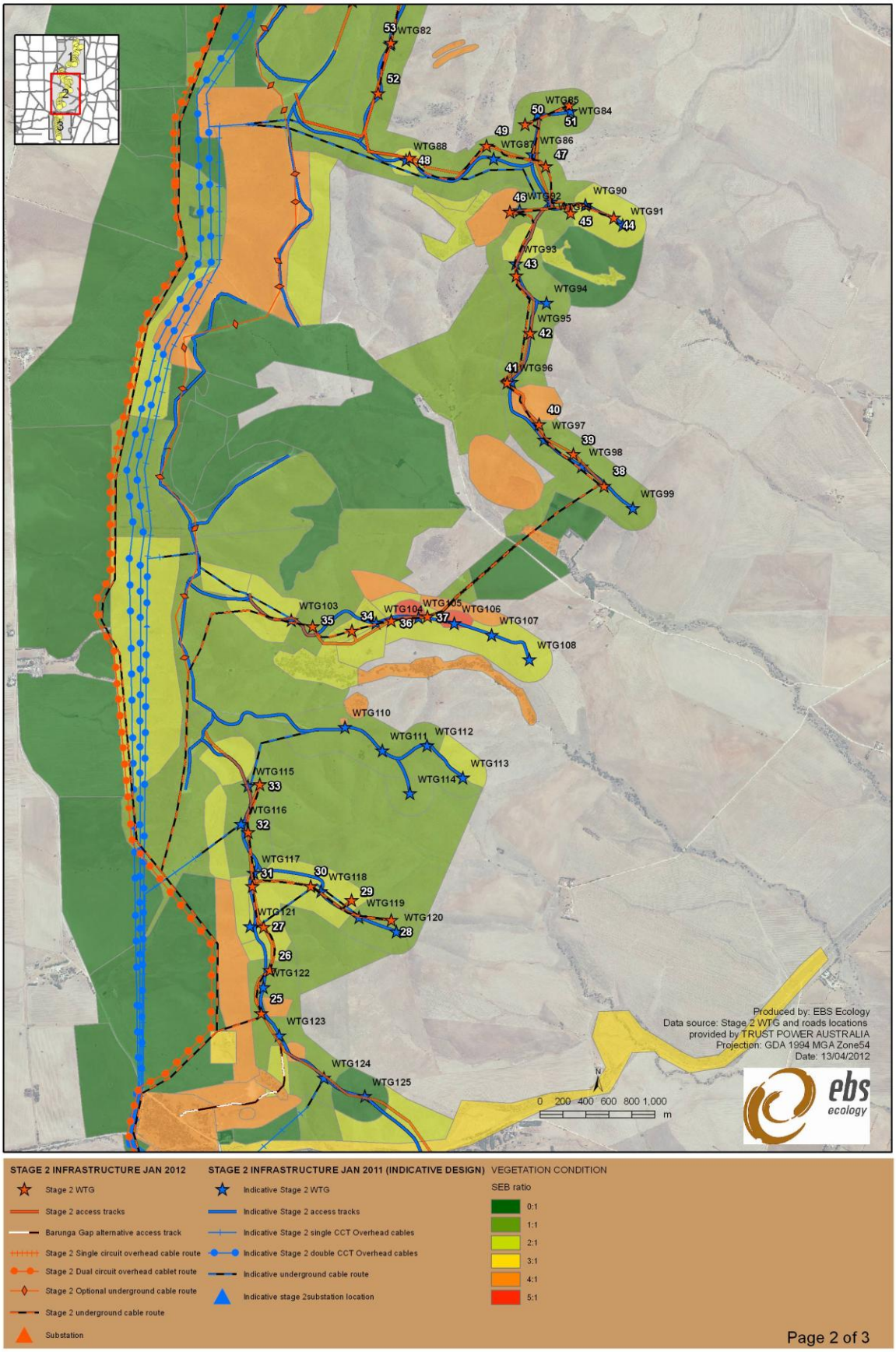

Figure 9. Vegetation conditions identified within the survey site (middle site).

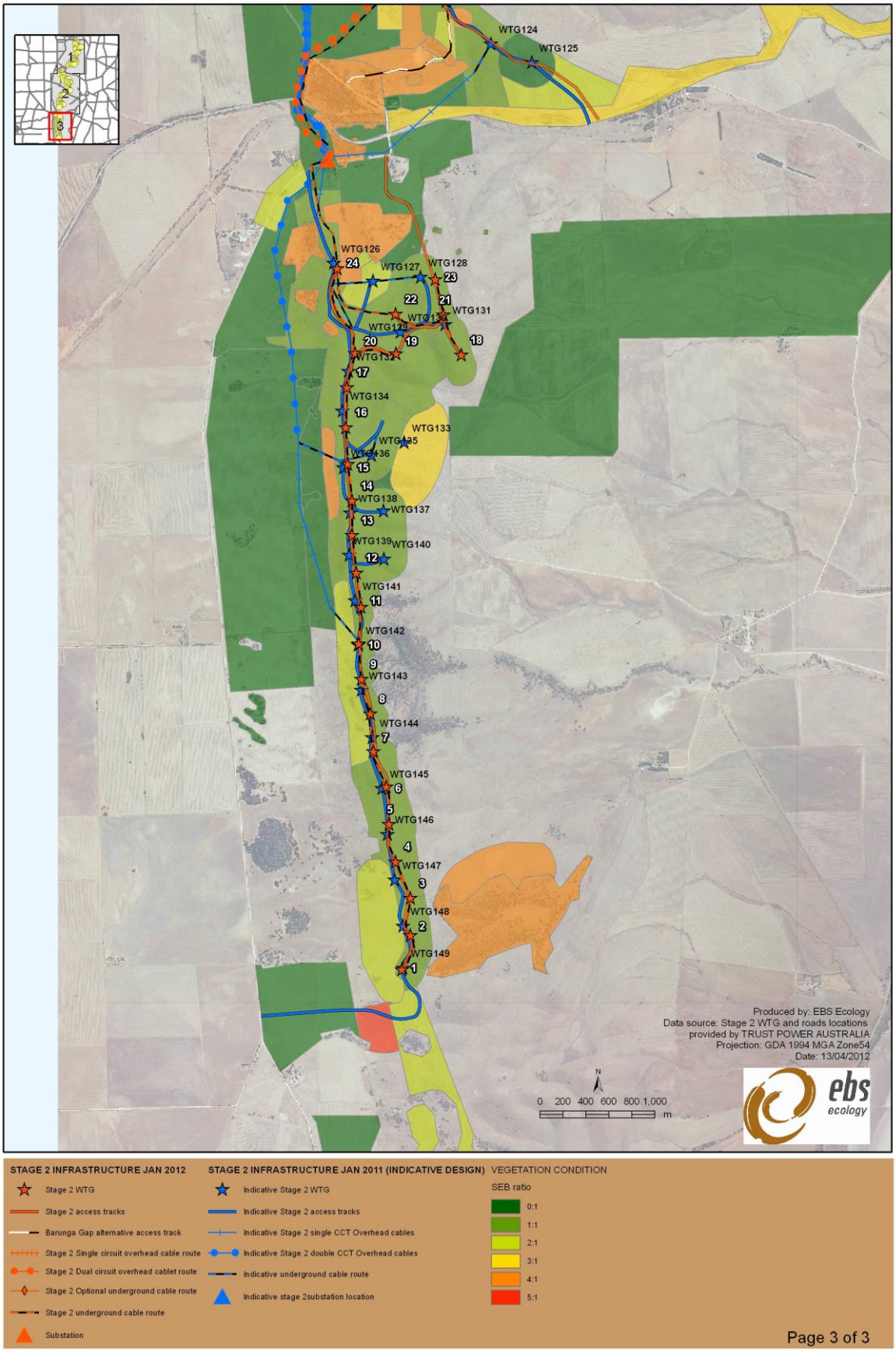

Figure 10. Vegetation conditions identified within the survey site (southern site).

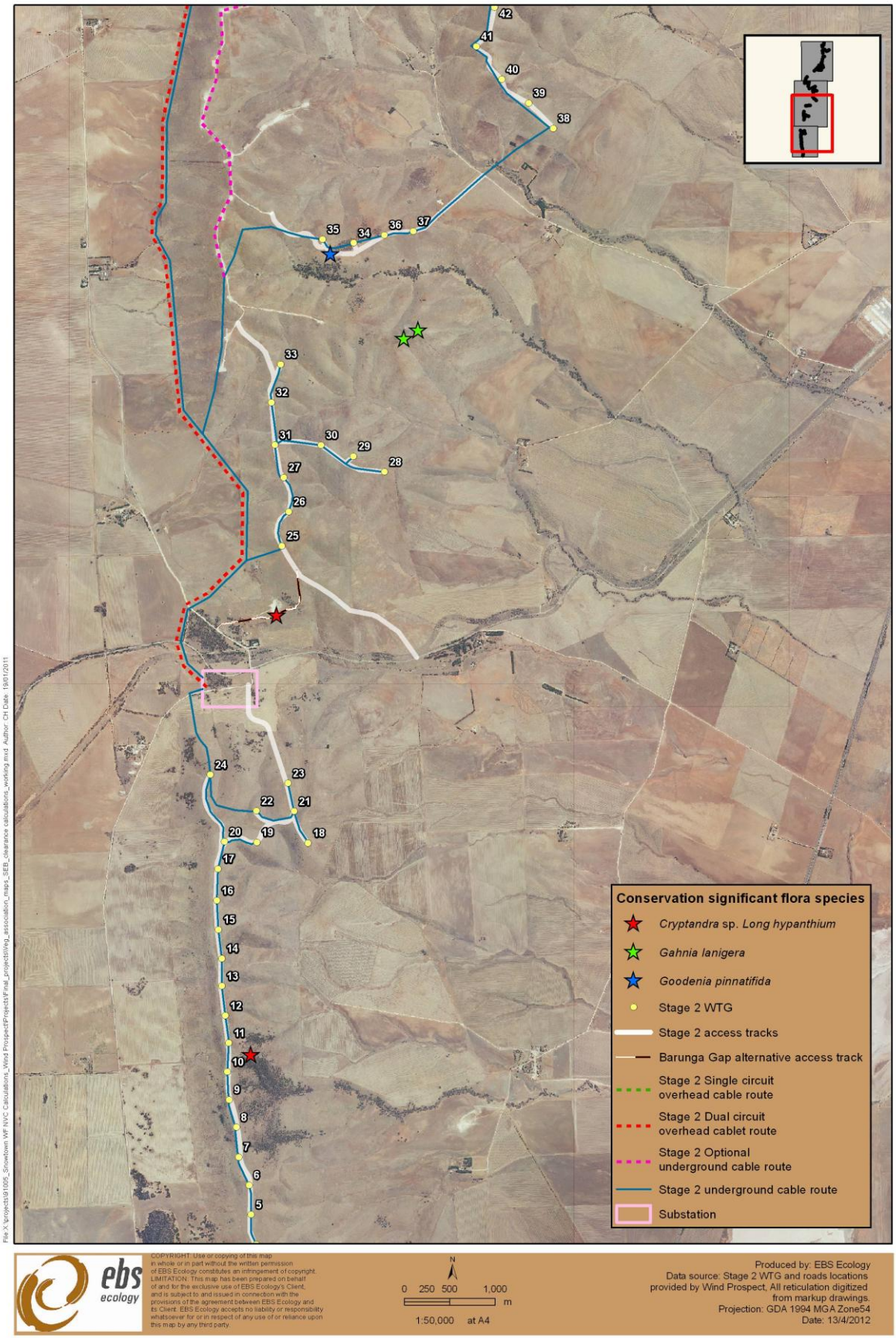

Figure 11. Conservation significant flora species identified within the survey site.

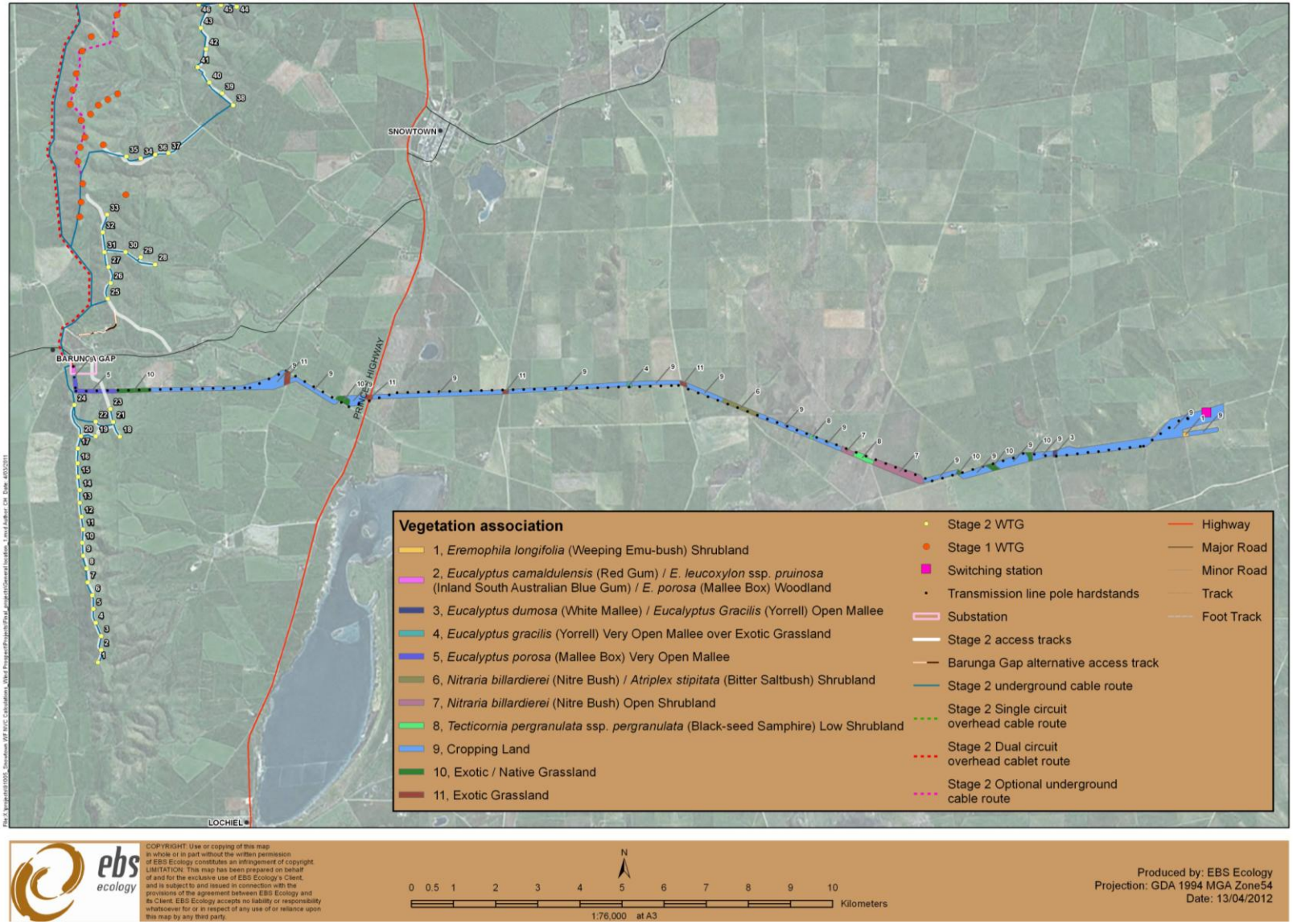

Figure 12. Vegetation association identified along the east-west transmission line with the proposed Stage 2 Snowtown Wind Farm.

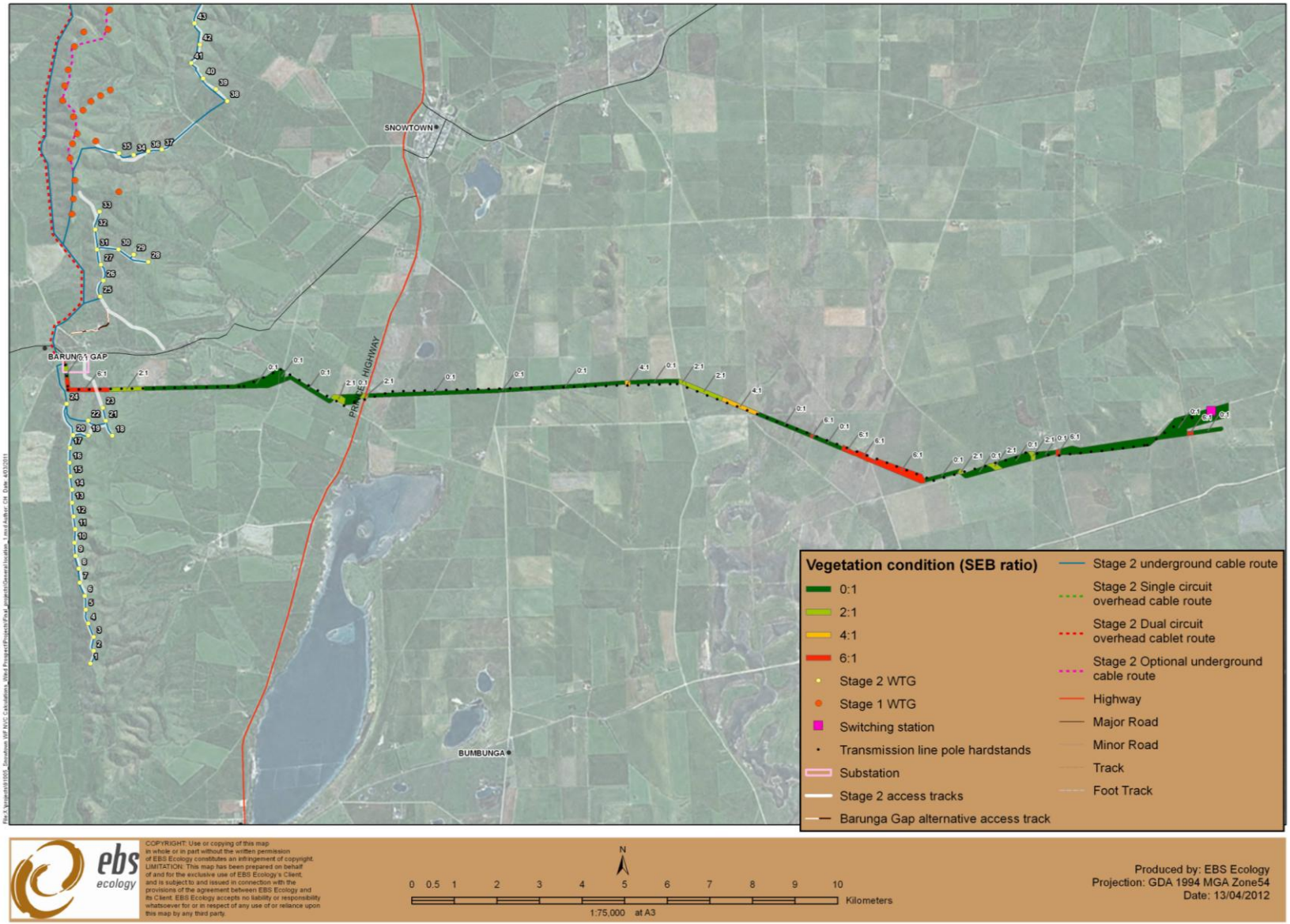

Figure 13. Vegetation conditions of associations identified along the transmission line running east-west.

4.2.2 Fauna results

The proposed Stage 2 Snowtown Wind Farm was generally degraded in terms of habitat value for native fauna with few native fauna species recorded (EBS 2008). Most fauna detected were exotic species such as Sheep (*Ovis aries*), European Rabbits (*Oryctolagus cuniculus*) and European Red Foxes (*Vulpes vulpes*). Native species observed or recorded during the 2008 survey included the Western Grey Kangaroo (*Macropus fuliginosus*), the Euro (*Macropus robustus*), Bearded Dragon (*Pogona vitticeps)* and Sleepy Lizard (*Tiliqua rugosa*) (EBS 2008).

4.2.2.1 Birds

A total of 730 birds from 40 species were recorded during the 2008 survey at the proposed Stage 2 wind farm site (EBS 2008). A wide range of bird types were recorded including raptors, waterbirds, parrots and honeyeaters, small passerines and other forest birds, grassland bird species and introduced species (EBS 2008).

Bird surveys were conducted in six different habitat types across the proposed Stage 2 Snowtown wind farm site (EBS 2008). The greatest number of birds and highest species diversity was recorded within mixed *Eucalypt* woodland habitat. Bird diversity and abundance was lowest in grassland habitats across the site in comparison to woodland habitats (EBS 2008). For specific bird survey location points, refer to *Snowtown Wind Farm Stage 2 Ecological Assessment* (EBS 2008).

4.2.2.2 Threatened Birds

Out of the 40 species recorded during the 2008 survey, one nationally significant species and four State rare bird species were recorded. These included the migratory Rainbow Bee-eater (*Merops ornatus*). Elegant Parrot (*Neophema elegans*), Hooded Robin (*Melanodryas cucullata cucullata*), Jacky Winter (*Microeca fascinans fascinans*) and Peregrine Falcon (*Falco peregrinus*) (Figure 14).

Six observations of the Rainbow Bee-eater were recorded within Eucalyptus Low Woodland (EBS 2008). These records correspond to the vegetation association *Eucalyptus oleosa* +/- *E. gracilis* +/- *E. porosa* Low Woodland (Figure 4, Figure 7) and scored an SEB ratio of 4:1 (Poor). The Rainbow Bee-eater was observed in a patch of native revegetation at the cemetery, within dense understory (EBS 2008). The sightings were located adjacent to the proposed Stage 2 substation with the closest proposed turbine being WTG24 (Figure 14).

Two observations of the Elegant Parrot were recorded feeding in native *Lomandra spp.* Grassland +/- *Austrostipa* spp*. / Austrodanthonia* sp*.* at the northern most end of Stage 1 (EBS 2008) (Figure 2, Figure 14). Proposed wind turbine, WTG90, is situated approximately 1.5 km south of where the Elegant Parrot was observed (Figure 14). Like other *Neophema* species, they are quiet and unobtrusive and forage almost entirely on the ground. Its flight is high, swift and direct. Elegant Parrots are seed-eaters which means they spend most of their time foraging low amongst native and exotic grasses.

Hooded Robins are typically found in lightly timbered woodland, mainly dominated by A*cacia* and/or E*ucalyptus* species. Four observations of the Hooded Robin were recorded during the 2008 survey (EBS 2008). These records were found closest to proposed turbines WTG7, WTG34 and WTG48 (Figure 14), which were situated within *A. verticillata* Low Woodland and *Eucalyptus oleosa* +/- *E. gracilis* +/- *E. porosa* Low Woodland (Figure 3).

An individual Jacky Winter was observed within *Eucalyptus oleosa* +/- *E. gracilis* +/- *E. porosa* Low Woodland (EBS 2008) (Figure 4), adjacent to the proposed WTG9 (Figure 14).

A single observation of the Peregrine Falcon was of an individual flying east to west over the dominant ridgeline (EBS 2008). The falcon descended into the *E. oleosa* / *E. gracilis* / *E. porosa* woodland to the east of the ridge.

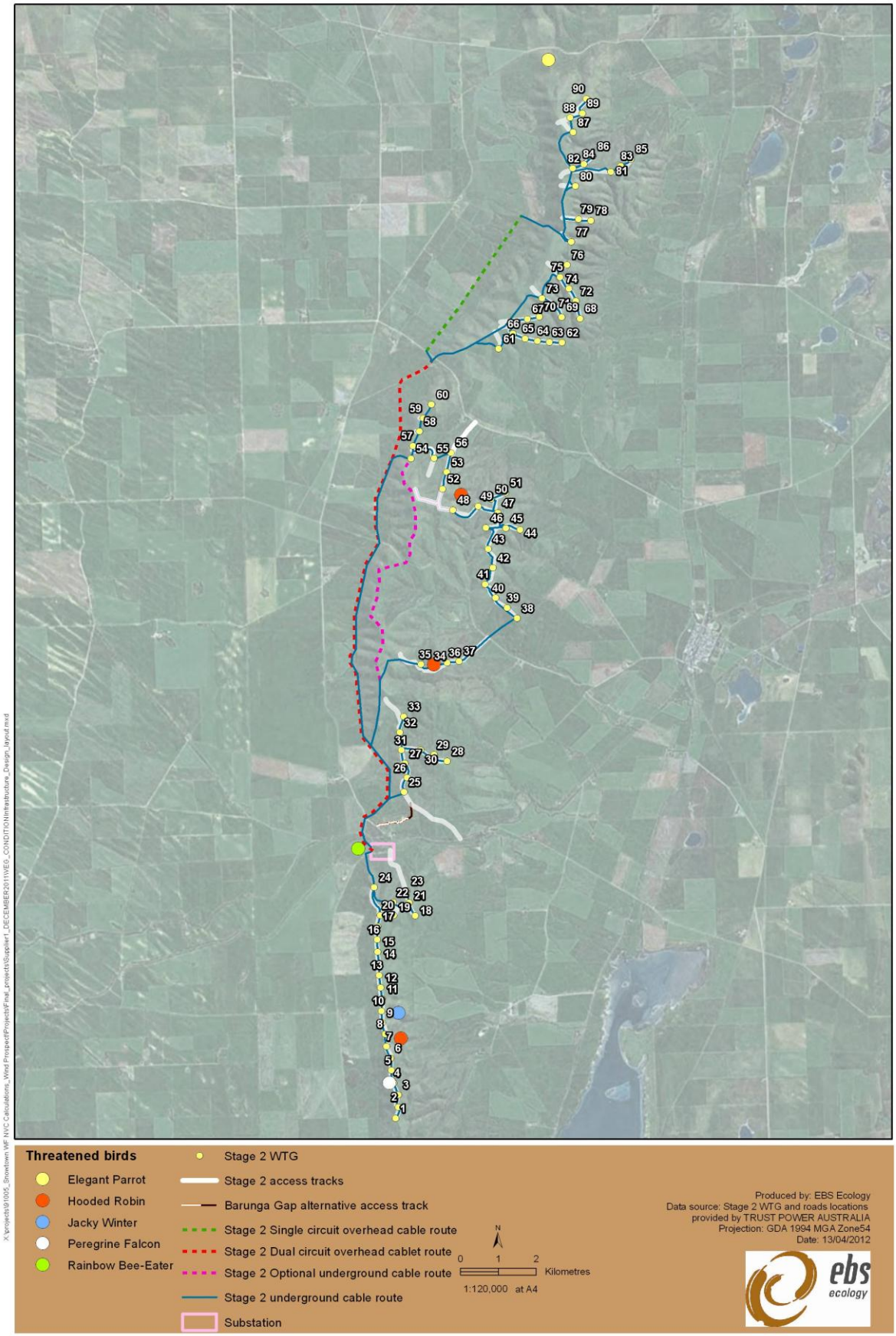

Figure 14. Conservation significant bird species identified within the survey site.

4.2.2.3 Wedge-tailed Eagles

The Wedge-tailed Eagle was observed a total of 12 times during the 2008 survey, and on most occasions they flew extensively over the crest of the dominant ridge, and also travelled widely over the ridges and hills to the west and east (EBS 2008).

A total of 11 Wedge-tailed Eagle nests have been recorded across the proposed Stage 2 Snowtown Wind Farm (EBS 2008; 2009) (Figure 15). Coordinates for these nest locations are listed in Appendix 6 and a nest status during each of the survey periods is provided in Table 5.

A consolidation of results from all surveys shows that:

- A cluster of three nests (Nest 2, 3 and 4) belonged to a single breeding pair
- A second cluster of three nests (Nest 5, 6 and 7) belonged to a single breeding pair
- Nests 8 and 9 belonged to a single breeding pair and
- Nest 10 and 11 may have belonged to a breeding pair each (although data collected during the 2010 and 2011 breeding season were not conclusive).

Three out of the 11 nests identified remained consistently active across six survey periods (Table 5).

Table 5. Nest status during each of the survey periods.

Nest No	2008 survey	2009 survey	July 2010	October 2010	December 2010	2011 survey
2	Active	Inactive	Inactive	-	-	Inactive
3	Inactive	Inactive	Inactive	-	-	Inactive
4	Inactive	Inactive	Inactive	-	-	Inactive
5	Inactive	Inactive	Inactive	-	-	Inactive
6	Inactive	Inactive	Inactive	-	-	Inactive
7	Inactive	Active	Active	Chick present	Chick fledged	Inactive
8	Active	Active	Active	Chick present	Chick fledged	Active
9	Inactive	Inactive	Inactive	-	-	Inactive
10	Active	Active	Active	Female on nest	Nest empty	Failed attempt
11	Not identified	Inactive	Inactive	-	-	Inactive

(-) indicates a survey was not conducted.

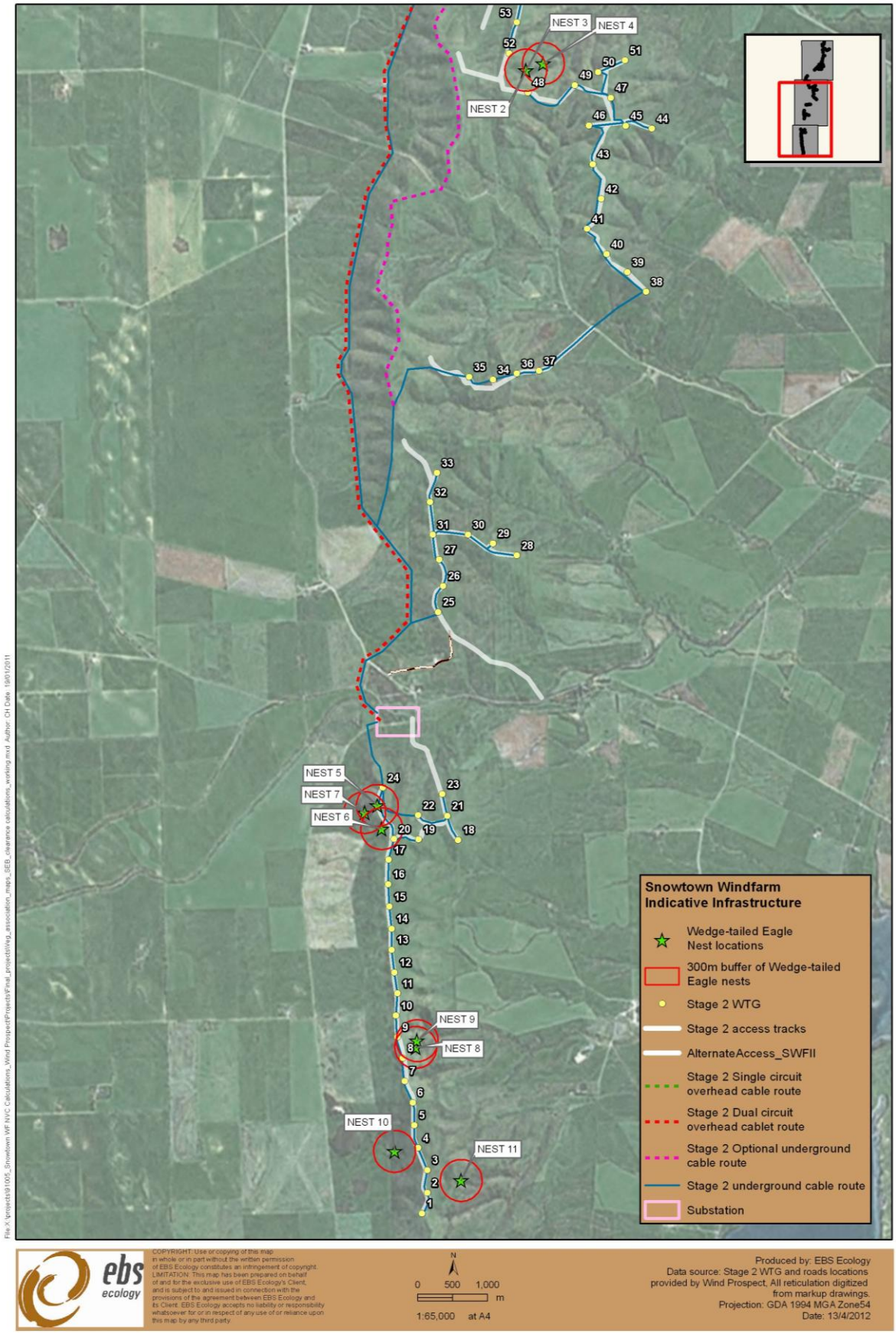

Figure 15. Wedge-tailed Eagle nest locations and recommended 300 m buffer zones around each nest.

A summary of each of the nest locations is provided below:

Nest 2

This Wedge-tailed Eagle nest was located in a thin and sparse patch of open *Allocasuarina verticillata* Woodland that lined a gully on the eastern side of the major ridge line. The nest was situated in a 7 m tall *Allocasuarina verticillata* which was one of the dominant trees in a small fragmented woodland habitat. The nest is located approximately 300 m from the proposed turbine WTG48 (Figure 15). Nest 2 was situated above and higher than Nests 3 & 4.

Two chicks and a pair of adult eagles were observed flying over the nest site (EBS 2008). During the 2009 survey, Nest 2 was not complete; no active signs were recorded and sticks were observed at the base of the nest on the ground (EBS 2009) (Figure 16). This nest was deemed inactive at the conclusion of three other surveys (Table 5); the nest was not surveyed in October and December 2010 due to its status at the beginning of the 2010 breeding season.

Figure 16. Nest 2 with sticks found at base (July 2010 survey).

Nest 3

This Wedge-tailed Eagle nest was located approximately 150 m further down the same gully as Nest 2, and was situated in an *Allocasuarina verticillata*. Nest 3 was inactive during the 2008 breeding season (EBS 2008) and was unlikely to be used in coming breeding seasons, due to the incomplete condition of the nest bowl and no recent signs of nest building (Figure 17) (EBS 2009). The nest is approximately 300 m from the proposed WTG48 (Figure 15). This nest was deemed inactive at the conclusion of each survey (Table 5), however given that Nest 2 had previously been active (EBS 2008), this nest may also have once been used by the same breeding pair at this site.

Figure 17. Nest 3 had an incomplete nest bowl (July 2010 survey).

Nest 4

Nest 4 was sighted in a dead *Allocasuarina verticillata*, approximately 450 m from the proposed wind turbine WTG48 (Figure 15). Nest 4 was inactive during the 2008 breeding season (EBS 2008). Signs of nest building and bird excrement were recorded during the 2009 survey (Figure 18) (EBS 2009) which suggested the nest was visited as a potential breeding site. The nest was also recorded as inactive during all other survey periods (Table 5).

Due to the proximity of Nests 2, 3 and 4 to each other, the nest cluster was likely to belong to a single breeding pair. All three nests are situated between 300-450 m from proposed turbine WTG48 and even further still from the turbine string WTG49-53. A recommended nest buffer of 300 m has been implemented by TrustPower as part of the embedded turbine design.

Figure 18. Nest 4 was situated within close proximity to Nests 2 and 3.

Nest 5

Nest 5 was located on the south eastern side of a wide gully, high on the ridge to the south of Barunga Gap Road. The nest was situated in a small patch of eucalypts below a weather station (Figure 19). The small sized nest was inactive during both the 2008 and 2009 breeding seasons (EBS 2008; 2009). Although the nest was intact, it remained disused during all other nest checks (Table 5). Nest 5 was situated 80 m from the ridge top where the Stage 2 access track is proposed and approximately 300 m from the proposed wind turbine WTG24 (Figure 15).

Figure 19. Nest 5 was situated in a gully looking north toward Stage 1.

Nest 6

Nest 6 was located on the western side of the major ridgeline, approximately 60 m from the ridgetop in a moderate sized patch of eucalypts (Figure 20). The relatively small nest was inactive during both the 2008 and 2009 breeding seasons (EBS 2008; 2009). It was partly broken with no nest material or active signs apparent. The nest was also recorded as inactive during all other survey periods (Table 5). The nest is approximately 200 m from the proposed wind turbine WTG20; this is the closest proximity of a nest to a proposed turbine out of all 11 nests (Figure 15).

Figure 20. Nest 6 situated 330 m from Nest 5.

Nest 7

Nest 7 was located approximately 330 m from Nest 6, 210 m from Nest 5, and is the larger of the three. It was recorded on the western side of the ridgeline approximately one third the way down the side of the hill in an old eucalypt tree (Figure 21). Whilst this nest was recorded as inactive during the 2008 survey (EBS 2008), signs of nesting activity and whitewash were recorded around and below the nest bowl the following season (EBS 2009). Nest 7 was active again during the 2010 breeding season. An adult was observed at the nest in July, a large downy chick was observed on nest with an adult eagle in October, and feathers, down and scat were observed around the nest bowl in December. The latter indicated that the chick had successfully fledged from the nest. The nest is located approximately 400 m from the proposed wind turbine WTG24 (Figure 15).

Due to the proximity of Nests 5, 6 and 7 to each other, the nest cluster was likely to belong to a single breeding pair of eagles. All three nests are situated between 200-400 m from proposed turbine locations (WTG20 and WTG24) and within the direct vicinity of turbine string WTG17-24 (Figure 15). The recommended nest buffer of 300 m was unable to be implemented as part of the embedded turbine design around these three nests. Where the 300 m buffer is unavoidable, this may increase the potential for collision and enhance the chances of disturbance to breeding.

Also, the proposed access road is within close proximity to these nest sites. As this is the only means of accessing the entire turbine string to the south, implementing a ‘quiet-period’ during construction may not be feasible. It is recommended that access and construction activities within the visible zone from the nest sites be limited throughout the breeding season.

Figure 21. Nest 7 situated 210 m from Nest 5.

Nest 8

Nest 8 was located in a large patch of *Eucalyptus oleosa* low woodland high on the eastern side of the prominent ridge line (Figure 22). The nest was active during the 2008 breeding season, which was confirmed by the presence of a chick and adult birds at the nest (EBS 2008). The nest was also deemed active during the 2009 breeding season as a freshly killed rabbit was observed in the nest bowl (EBS 2009). The nest was active across the 2010 breeding season; a female eagle was observed at nest during the July 2010 survey, an adult eagle was perched above the nest with a white downy chick below during the October 2010 visit and signs of a successfully fledged chick were evident during the December 2010 nest check. Signs of an active nest were again recorded during the 2011 survey. The nest is situated approximately 300 m from the proposed turbine WTG8 (Figure 15).

Figure 22. Nest 8 located 300 m from WTG8.

Nest 9

Nest 9 was located only 120 m from Nest 8. It was also situated low on the hill within a large patch of *Eucalyptus oleosa* low woodland (Figure 15). The nest was the largest on site, as it stands over 2.5 m high, and 1 m wide (Figure 23). It was not used during the 2008 and 2009 breeding seasons (EBS 2008; 2009) and was deemed unlikely be used during future breeding seasons. This was due to the nest activity at Nest 8 and the disused condition of Nest 9. No other survey periods recorded this nest as active. Nest 9 is approximately 300 m from the proposed turbine WTG9 (Figure 15).

Due to the proximity of Nests 8 and 9 to each other, the nest cluster was likely to belong to a single breeding pair of eagles. Both nests are situated 300 m from the nearest proposed turbine (WTG8 / WTG9), which is just on the cusp of the recommended buffer for all nest locations. Eagles are highly likely to concentrate their flight activity over this section of the ridge, where Nests 8 and 9 were located. This is based on the fact the nests are located on the easterly slope of the prominent ridgeline. The breeding pair at Nest site 8 and 9 was recorded flying heavily over the ridge top where turbines WTG7-9 are proposed (EBS 2009). Collision risk may also be higher for this cluster of nests, based on eagle activity recorded around Nest 8 and both nests proximity to proposed turbines.

Figure 23. Nest 9 located 120 m from Nest 8.

Nest 10

Nest 10 was situated in a tall eucalypt tree that was located in a small patch of low woodland (Figure 24). The nest tree is situated approximately 350 m from the proposed turbine WT4 (Figure 15). This nest was used during the 2008 breeding season, evidenced by a downy chick, and a pair of Wedge-tailed Eagles being observed (EBS 2008). The nest was also recorded as active during the 2009 breeding season (EBS 2009). Nest 10 was recorded as active across the 2010 breeding season; a female was observed sitting tight on the nest, fresh nest material and scat was observed in and around the nest and the nest was later abandoned. This was recorded as a failed attempt.

Figure 24. Nest 10.

Nest 11

Nest 11 was situated in a patch of woodland that was initially searched during the 2009 breeding season (EBS 2009). It was located deep in a vegetated gully to the east of the prominent ridgeline, 830 m south east of Nest 10 (Figure 15). The nest itself was relatively small in size, and was partially falling out of the moderate sized eucalypt in which it sits (Figure 25). This suggested that the nest was not being used across continuous breeding seasons. Nest 11 is located approximately 450 m from turbine WTG2 (Figure 15).

Nests 10 and 11 may belong to the breeding pair to the north east (also using Nests 8 and 9), or they belong to an additional breeding pair. A recommended nest buffer of 300 m has been implemented by TrustPower as part of the embedded turbine design.

Figure 25. Nest 11 is situated in a gully located south of Nest 10.

A vegetation assessment was undertaken by EBS Ecology (October 2010) within adjusted turbine locations within proposed Stage 2. A previously unidentified Wedge-tailed Eagle nest was observed between Stage 1 and Stage 2 (233493E / 6259713N) (Figure 26). There were no signs to suggest this nest was active during the 2011 breeding season and its dilapidated condition suggests it has not been used for breeding for many seasons.

Figure 26. Previously unidentified eagle nest within proposed Stage 2.

4.2.2.4 Birds deemed at high risk of collision with turbines

The most direct impact on birds from Stage 2 of the Snowtown wind farm is likely to involve bird mortalities or injuries from collisions with turbines. The birds most at risk of direct impacts were those that flew over the ridge tops in the areas associated with the proposed turbine locations. Five raptor species were recorded at or near Stage 2 during the 2008 survey (EBS 2008). Of these the Wedge-tailed Eagle performed the highest risk movements, as they regularly flew at the height associated with the rotor swept area of turbines (35 - 95 metres) (Brett Lane and Associates 2004).

The single observation of a Peregrine Falcon during the 2008 survey (EBS 2008) was of an individual flying rapidly from east to west over the dominant ridgeline (Figure 14). This bird cleared the ridge at a height of ~10 metres, and descended into the *E. oleosa / E. gracilis / E. porosa* Woodland to the east of the ridge (EBS 2008). It was determined highly likely that this species would fly over the crest of the ridge at heights within the rotor-swept area (EBS 2008).

4.2.2.5 Bats

Six bat species were identified over two nights of AnaBat recordings during the 2008 survey (EBS 2008). These included: Gould's Wattled Bat (*Chalinolobus gouldii*), Chocolate Wattled Bat (*Chalinolobus morio*), Southern Freetail Bats (several undefined species) (*Mormopterus sp*), Lesser Long-eared Bat (*Nyctophilus geoffroyi*), White-striped Freetail-bat (*Tadarida australis*) and Southern Forest Bat (*Vespadelus regulus*). The largest number of call files (73) was assigned to Gould's Wattled Bat / Southern Freetail Bats, but the species identification was not able to be determined.

In many areas of South Australia, not enough information is available on bat reference calls to make definitive identifications from AnaBat recordings. No reference calls exist for the Mid-North region, which

includes Snowtown, as it is very poorly surveyed for bats. Reference calls from the Adelaide region were used to identify the call files recorded during the 2008 survey (T Reardon *pers comm.* 2008).

No species of conservation significance were identified from the AnaBat calls recorded during the 2008 survey (EBS 2008). Several calls of the *Mormopterus* genus were recorded however, some of which may be of conservation significance. *Mormopterus* species definitions are currently unclear, with up to seven species awaiting scientific description and most have no published scientific name at present (Menkhorst and Knight 2004). Species to be described include (among others) the Inland Freetail-bat (short penis form), Eastern Freetail bat (long penis form) & Hairy Rostrum Freetail-bat.

Allocasuarina Low Woodlands and *Eucalyptus* Woodlands were considered to be of most habitat value for roosting bats (EBS 2008). The Drooping Sheoak *(Allocasuarina verticillata)*, found as isolated plants in Exotic Grasslands, may have also provided habitat value. All of these woodlands were found to have large and small hollows suitable for bat roosting (EBS 2008).

4.2.2.6 Pygmy Blue-tongue Lizard

The majority of habitat available within the Stage 2 project site was considered unsuitable for Pygmy Blue-tongue Lizards (EBS 2009) with no observations recorded during field surveys conducted by EBS Ecology (EBS 2008, 2009 and 2010a). These 'unsuitable' areas were generally located on exposed ridge tops or footslopes where the soil surface was too rocky. Ten areas were identified as potential Pygmy Blue-tongue Lizard habitat and were assessed during spring 2009 (EBS 2010a). A total of 60 spider burrows were inspected in survey areas. The areas that offered the greatest habitat value within the proposed Stage 2 were unploughed areas of native grasslands, especially Iron Grass (*Lomandra spp*) Grassland and Spear Grass *(Austrostipa* sp*.) /* Wallaby grass *(Austrodanthonia* sp*.)* Grassland as well as Exotic Grasslands (Figure 27).

Figure 27. Potential Pygmy Blue-tongue Lizard habitat on a gentle slope (presence of native grass).

4.2.2.7 Flinders Worm-lizard

There were no observations of the Flinders Worm-lizard recorded during the field surveys conducted by EBS Ecology for the proposed Stage 2 Snowtown Wind Farm (EBS 2008; 2009). Given the potential range of the Flinders Worm-lizard, the entire survey area holds potential habitat for this species. It is considered likely that the Flinders Worm-lizard exists in various habitats across the entire survey area due to the presence of loose rocky areas and leaf litter in the woodlands associations.

5 NATIVE VEGETATION CLEARANCE REQUIRED

5.1 Wind turbine generators and hardstands

There are 90 wind turbine generators (WTGs) and associated hardstands proposed for Snowtown Wind Farm Stage 2, for which an SEB calculation is required. A total SEB of 20.247 ha is required to off-set the WTG areas to be cleared. **Error! Reference source not found.**Table 6 summarises the required SEB off-set area for each SEB ratio for Stage 2 wind turbine generators and hardstands.

Table 6. Summary of SEB off-set area required for WTGs and hardstands

Infrastructure component	SEB Ratio	No. WTGs*	Actual area to be cleared (ha)	SEB Off-set area required (ha)
WTGs and hardstands	0:1	9	1.126	0
	1:1	60	8.528	8.528
	2:1	15	1.954	3.908
	4:1	11	1.274	5.096
	5:1	4	0.543	3.258
		Total	**13.425**	**20.247**

*some WTGs and hardstands are sited within areas of varying SEB ratios.

5.2 Access tracks

Wherever possible, the existing established access tracks for Snowtown Stage 1 Wind Farm will be used as access for the Snowtown Stage 2 Wind Farm to minimise any additional impacts to vegetation.

Approximately 45.64 km of new access tracks is proposed for the Snowtown Stage 2 Wind Farm. Based on the clearance estimates required for the construction of access tracks, this equates to a total clearance of approximately 39.87 ha. A total SEB of 57.89 ha is required to off-set this clearance.

A summary of the amount of native vegetation clearance and required SEB offset for access tracks is shown in **Error! Reference source not found.**7.

Two sections of track are presented within the Barunga Gap area leading to turbine 25. Clearance associated with the alternative route is recorded separately and therefore the totals above only allow for the eastern section (see Figure.

Table 7. Summary of SEB off-set area required for access tracks.

Infrastructure component	SEB Ratio	Actual area to be cleared (ha)	SEB Off-set area required (ha)
Access tracks	0:1	4.665	0
	1:1	24.15	24.15
	1:1	0.027*	0.027*
	2:1	5.82	11.639
	2:1	0.426*	0.852*
	3:1	0.284	0.852
	4:1	3.486	13.943
	4:1	0.504*	2.018*
	5:1	1.46	7.300
	Total	**39.87****	**57.89****

*Barunga Gap alternative access track
** Total does not include Barunga Gap alternative access track

5.3 Underground 33kV cable routes

Approximately 63.2 km of underground cable routes is proposed for the Snowtown Wind Farm Stage 2. Of the 63.2 km total length, 30.68 km has been aligned with existing or proposed access tracks, to reduce additional clearance. Therefore 32.52 km of the proposed underground cable routes will require additional clearance. Based on the clearance estimates required for the construction of underground cable routes (as per Table 2), this equates to a total clearance of approximately 16.922 ha. A total SEB of 21.206 ha is required to off-set this clearance.

A summary of the amount of native vegetation clearance required SEB offset for underground cable routes is shown in Table 8.

Table 8. Summary of SEB off-set area required for underground 33 kV cable routes.

Infrastructure component	SEB Ratio	Actual area to be cleared (ha)	SEB Off-set area required (ha)
Underground 33 kV cable routes	0:1	3.478	0.000
	1:1	10.158	10.158
	2:1	1.212	2.424
	3:1	0.003	0.009
	4:1	1.74	6.96
	5:1	0.331	1.655
	Total	**16.922**	**21.206**

An optional route has been proposed by TrustPower as an alternative route to the underground cable, which would equate to a total clearance of approximately 3.43 ha (Table 9).

Table 9. Summary of SEB off-set area required for additional underground cable route (optional).

Infrastructure component	SEB Ratio	Actual area to be cleared (ha)	SEB Off-set area required (ha)
Additional Underground cable routes	0:1	0.943	0.000
	1:1	1.566	1.566
	4:1	0.921	3.684
	Total	**3.43**	**5.25**

5.4 Overhead 33kV cable routes

Approximately 18.82 km of overhead cable routes is proposed for the Snowtown Wind Farm Stage 2. Based on the clearance estimates required for the construction of overhead cable routes, this equates to a total clearance of approximately 7.481 ha. A total of 2.406 ha is required to offset this clearance.

A summary of the amount of native vegetation clearance that will be required for overhead cable routes is shown in Table 10.

Table 10. Summary of SEB off-set area required for overhead 33 kV cable routes.

Infrastructure component	SEB Ratio	Actual area to be cleared (ha)	SEB Off-set area required (ha)
Overhead 33 kV cable routes	0:1	5.749	0.000
	1:1	1.058	1.058
	2:1	0.674	1.348
	Total	**7.481**	**2.406**

5.5 Overhead transmission line

The overhead transmission line will be approximately 28.5 km long. Based on a pole being located every 250 m along the transmission line route, around 117 poles will be required. This equates to a total clearance of 0.2925 ha for the transmission line.

The majority of the overhead transmission line is located within cropping land, with an SEB ratio of 0:1. A summary of the clearance required for the transmission line is shown in Table 11. A total SEB off-set of 0.32 ha is required for the transmission line.

Table 11. Summary of SEB off-set area required for overhead transmission line.

Infrastructure component	SEB Ratio	No. poles	Actual area to be cleared (ha)	SEB Off-set area required (ha)
Overhead transmission line	0:1	83	0.215	0
	2:1	12	0.03	0.06
	4:1	5	0.0125	0.05
	6:1	13	0.035	0.21
	Total	**117**	**0.2925**	**0.32**

5.6 On-site substation

The proposed on-site substation covers one vegetation association with an assigned SEB ratio of 0:1 (Table 12). Based on the clearance estimates required, this equates to a total clearance of approximately 3 ha. Therefore no SEB off-set is required for the onsite substation.

Table 12. Summary of SEB off-set area required for on-site substation.

Infrastructure component	SEB Ratio	No. Veg Association	Actual area to be cleared (ha)	SEB Off-set area required (ha)
On-site substation	0:1	1	3.0	0.0
		Total	**3.0**	**0.0**

Vegetation Association in 0:1 - Cropping Land
Vegetation Association in 4:1 - *Eucalyptus oleosa +/- E. gracilis +/- E. porosa* Low Woodland

5.7 Switching station

The dimensions of the switching station will be approximately 160 m x 82 m, which equates to a total clearance of approximately 1.31 ha.

The switching station is sited entirely within cropping land with an SEB ratio of 0:1. Therefore no SEB off-set is required for the switching station.

5.8 Summary of Clearance

A total of approximately 82.3 ha is proposed for the clearance associated with the construction of the Snowtown Wind Farm Stage 2 project. A total of 102.1 ha is required to be off-set for the clearance of native vegetation. A summary of the clearance required and associated SEB for each infrastructure component is provided in Table 13.

Table 13. Summary of clearance required for the Snowtown Wind Farm Stage 2 project.

Infrastructure component	Actual area to be cleared (ha)	SEB Off-set area required (ha)
WTGs + hardstands	13.425	20.247
Access tracks	39.87	57.89
Alternative Barunga Gap Access tracks	*(0.957)*	*(2.9)*
Underground 33kV cable alignment	16.922	21.206
Optional underground cable route	*(3.43)*	*(5.25)*
Overhead 33kV cable alignment	7.481	2.406
Transmission line	0.2925	0.32
On-site substation	3.0	0
Switching station	1.31	0
Total	**82.3***	**102.1***

**excludes the optional underground cable route and alternative Barunga Gap Access tracks*

6 DISCUSSION

6.1 Flora species and vegetation communities

Limited remnant native vegetation is present throughout the proposed Stage 2 site and clearance of these areas has been avoided where possible, when determining the locations of infrastructure. All native vegetation within the project site is covered by the *Native Vegetation Act 1991* and *Regulations, 2003*. This report is to be submitted by TrustPower as part of their Development Application, and is an amendment to a clearance application that has already been submitted to the Native Vegetation Council. Under the *Environment Protection and Biodiversity Conservation Act* 1999 (EPBC Act), the proposed action '*to develop stage two of the Snowtown Wind Farm and associated transmission line, near Snowtown, South Australia'* was deemed not a controlled action (EPBC 2009/5073).

The *Lomandra effusa* Grassland areas do not qualify as the critically endangered TEC under the EPBC Act. It is considered very unlikely the grasslands would ever support the appropriate attributes necessary to qualify for protection under the EPBC Act as they exist within modified grazing areas which are heavily degraded. However, a large pocket of degraded *L. effusa* Grassland is present as understorey near the access track for wind turbines WTG35 –WTG37 and should be considered ecologically significant to the area. While these patches did not qualify as nationally listed TEC's, native grasslands are very poorly conserved within South Australia and therefore any degraded grassland offers biodiversity value to the local area.

Proposed Stage 2 developments have been confined to the Exotic Grasslands or Cropping Land Associations wherever possible. When working within Exotic Grasslands, the further proliferation of exotic flora species should be avoided during all phases of the Stage 2 development, particularly declared species found within the project site. Mitigation measures will need to be put in place regarding vehicle movement and soil movement on the site to avoid the distribution of exotic flora species.

The native vegetation supported within the proposed transmission line alignment was generally moderate to poor quality (EBS 2010b); it does however represent some of the only remaining remnant vegetation within the broader landscape. Much of the land has been disturbed and is now used for sheep grazing and cereal cropping.

6.2 Fauna and habitat

Exotic Grassland and Cropping Land on site were considered of low habitat value for native fauna species. The woodland associations would be of high habitat value for native ground mammals, reptiles, bats and birds. These pockets of habitat would provide shelter for a vast range of native fauna; woodland trees provide vital hollows for bats roosting, shelter and nesting sites for birds, shelter for larger mammals (kangaroos and euros) and cover/shelter for reptiles. The clearance of woodlands or scattered trees should be avoided during the construction of Stage 2.

One bird species of national conservation significance and four state rare birds were recorded within the proposed Stage 2 Snowtown Wind Farm. These species are discussed in more detail below.

Rainbow Bee-eater

Rainbow Bee-eaters occur mainly in open forests and woodlands, shrublands, and in various cleared or semi-cleared habitats. They can also occur in grasslands especially in arid or semi-arid areas, in riparian, floodplain or wetland vegetation assemblages. They have also been regularly recorded in other disturbed habitats including roadside vegetation and in quarries, mines or gravel pits, where they often breed. In Australia, the breeding season extends from August to January (Boland 2004a; Higgins 1999). Nesting areas are often re-used (Lill 1993), and banding studies indicate that at least some migrant birds return to the same nesting area each year (Carruthers 1975; Lane 1963; Waterman 1965; Boland 2004a).

The loss of native grasslands through the construction of roads and turbines would have the potential to influence the movement of these birds across the landscape and possibly impact on localised populations. This bird was found only within woodlands at the site. It is unclear how high these birds fly, and as such we cannot rule out possible contact with proposed turbines, given the behaviour of this species.

Elegant Parrot

The Elegant Parrot is most often encountered in flocks of 20-100 or more, except in the breeding season when they tend to be found either in pairs or small parties. Partly nomadic, the Elegant Parrot may be encountered in the company of the similar looking Blue-winged Parrot. They prefer heathland and open country, open woodland, cropland and semiarid scrub, and feed on seeds of grasses and herbaceous plants. This species relies heavily on the seeds of native grasses as food which highlights the importance of this habitat type within the proposed Stage 2.

Similar to the Rainbow Bee-eater, the loss of native grasslands through the construction of roads and turbines would have the potential to influence the movement of the Elegant Parrot across the landscape. This species was observed outside of the proposed Stage 2 wind farm site in Lomandra grasslands. Roads and turbines already exist in this area for the northern extent of Stage 1, so it is difficult to predict the likely impact given infrastructure already exists where this species was observed.

Hooded Robin

Hooded Robins are commonly found in south-eastern Australia from Adelaide to Brisbane, but the eastern sub species *Melanodryas cucullata cucullata* is distributed across south-eastern Australia, and is listed as Vulnerable in NSW and in SA. Hooded Robins are found in lightly timbered woodland, mainly dominated by acacia and/or eucalypts.

The Hooded Robin was found in woodland habitat closest to WTG7, WTG34 and WTG48 (Figure 14). These birds are unlikely to collide with turbines; habitat disturbance is the greatest threat to this species.

During the construction of Stage 2, access tracks to turbines will follow existing tracks where possible (R.van Zyl pers.comm. 2012), which would contribute toward lessening the impact on woodland areas.

Jacky Winter

Two sub-species of the Jacky Winter live in South Australia, with sub species *Microeca fascinans ssp. fascinans* listed as rare under NPW Act. They prefer open woodland with an open shrub layer and a lot of bare ground, and are often seen in farm paddocks with scattered trees. They catch insects from the air on the wing. Numbers have declined substantially in some areas, particularly in the south, from clearing of woodland habitat for farming or housing.

Similar to the Hooded Robin, these birds are unlikely to collide with turbines with habitat disturbance being the greatest threat to this species. During the construction of Stage 2, access tracks to turbines will follow existing tracks where possible (R.van Zyl pers.comm.2012), which would contribute toward lessening the impact on woodland areas.

Peregrine Falcon

The Peregrine Falcon is found across Australia, but is not common anywhere. It is found in most habitats, from rainforests to the arid zone, and at most altitudes, from the coast to alpine areas. It requires abundant prey and secures nest sites, and prefers coastal and inland cliffs or open woodlands near water. Although these birds are not common, they have successfully spread worldwide, and will sometimes nest on artificial structures. Peregrine Falcons commonly occur at windy sites along ranges, and often nest in crevices of rocky cliff faces (Pizzey and Knight 1997).

No nesting sites were recorded for this species within the Stage 2 proposal. A single observation of the Peregrine Falcon was during the 2008 survey; it flew rapidly from east to west over the dominant ridgeline and cleared the ridge at a height of ~10 metres. The individual was observed near wind turbine cluster WTG1-WTG4. It was determined highly likely that this species would fly over the crest of the ridge at heights within the rotor-swept area.

Nest Buffers and disturbance impacts

TrustPower has implemented a recommended nest buffer of 300 m as part of the embedded turbine design (Figure 15). EBS Ecology proposed that a suitable buffer distance be considered in the planning process in order to reduce the likelihood of impact on Wedge-tailed Eagles breeding within the proposed Stage 2 site. Wedge-tailed Eagles are notoriously fussy nesters and abandon nests if disturbed too much. The presence of turbines overhead with noise and constant movement of shadows across the landscape may distract breeding birds, or deter them from foraging in certain areas.

Buffers were also placed around disused Wedge-tailed Eagle nest sites. The absence of breeding activity at Wedge-tailed Eagle nest sites in a particular breeding season does not mean that these sites

may not be used in future years. A change in nest site from one year to another by a breeding pair is known to occur in Wedge-tailed Eagles.

Where possible, it is also recommended that TrustPower limit disturbance to nesting sites by timing the access and construction of turbines across Stage 2, based on the occupancy of nests. Pre-construction eagle surveys would determine which nests were active during the 2012 breeding season. Construction activities planned outside of key periods of a Wedge-tailed Eagles breeding season, would reduce the chances of disturbing birds on nest and fledging young. Key periods during an eagles breeding season include egg-laying and incubation in early-July to early-August and chick fledging in early to mid-December (Dennis 2006).

The opportunity exists at the Snowtown Wind Farm site to investigate the disturbance effects of wind farms on eagles. Given that EBS Ecology has collated data over the last two years, on the breeding success of Wedge-tailed Eagles at the proposed Stage 2 site, there is also the opportunity for post-construction surveying. This would enable a robust scientific comparison of pre and post wind farm construction, of utilisation rates of the ridge lines and to determine the existence of any avoidance behaviour. The impact of the Stage 2 development on the breeding success and foraging behaviour of resident breeding Wedge-tailed Eagles could also be examined.

Bats

AnaBat recordings alone may only represent a proportion of species that are actually present onsite or visiting the area. The recording of calls on any one night may be influenced by many factors including temperature, humidity, insect activity, wind and associated vegetation movement. The Mid-North region is very poorly known in terms of bats species' actual distributions and bat calls are not easily identifiable in the region. Although no species of conservation significance were found during surveys on site, trapping may have been an additional option to confirm the identifications that were recorded from AnaBat recordings (T Reardon *pers comm*.). Thorough and ongoing monitoring of bat populations is required to determine the status of local bats in the Mid-North. The *Mormopterus* genus has been recorded at the Snowtown Wind Farm in reasonable numbers over a relatively short period of recordings (two nights). Considering that several species of the *Mormopterus* genus are awaiting definition and the possible assignment of a conservation status is pending, more detailed Level 2 bat surveys have been previously recommended (EBS 2008), to be undertaken during summer months to better understand the species present and their use of the site.

Any clearance of woodland habitats within the project site would result in direct removal of potential roosting habitat for bats, and possibly the destruction of roosting bats. Clearance of this roosting habitat should be avoided as the extent of native remnant vegetation within the region is very low (Graham et al 2001). If clearance of potential bat roosting habitat is to be undertaken within any part of the survey area, it is preferable to do this at night during warmer months when bats are more likely to be out searching for insects, thus minimising direct mortality of roosting bats (T Reardon *pers comm*.).

Little is known about the effect of operating turbines on bat behaviour, whether bats avoid turbines or not, and the actual number of bat-strikes that have been caused by operational wind farms in Australia (T Reardon *pers comm*.). Without a more detailed knowledge of the bat species present, their distribution and their behaviours in the survey area (pre / post construction and during operation) it is difficult to accurately assess the impacts of the proposed Stage 2 area on bats.

Pygmy Blue-tongue Lizard

Much of the proposed Stage 2 site was confirmed as fragmented habitat, where the soil profile was not adequate for suitably-sized spider holes to exist. Areas considered as unsuitable habitat were: ploughed and cropped land, areas that lacked spider burrows (poor soil structure and shallow depth), areas containing shallow soils with exposed rock / surface rock, and land that contained steep slopes. Although potential habitat within the proposed Stage 2 site was unsuitable, the Pygmy Blue-tongue Lizard is known to inhabit highly degraded grasslands (Milne *et al.* 2000).

Flinders Worm Lizard

The Flinders Worm-lizard is a very small, worm-like, burrowing lizard with poorly developed hind limb flaps (Figure 28). It burrows freely in loose sand and soil, under rocks and litter in open woodland, native tussock grassland, riparian habitats and rocky isolates. It prefers stony soils, or clay soils with a stony surface, and has been found sheltering beneath stones and rotting stumps or occasionally in ant and termite nests. Their diet consists almost entirely of the larvae and pupae of ants (DSEWPaC 2011).

The Flinders Worm-lizard is endemic to South Australia and although it has a national conservation rating, it does not have a state conservation rating. At the time (approximately 1993) when the national conservation rating was assigned to this species, little was known about its habits and abundance (M Hutchinson. pers. comm.). Since this time, it has been found that there are numerous sites where this species has been found. The state conservation ratings have been updated more recently than the national ratings, which have caused the difference between the two. Suitable habitat for this species includes unploughed grasslands, particularly where flat surface rocks occur in the landscape, and woodland sites containing loose woody debris and leaf litter.

Figure 28. Image of a nationally vulnerable Flinders Ranges Worm-lizard (source: EBS 2004)

7 RECOMMENDATIONS

The following recommendations have been made to reduce the possible impacts of the development of the Snowtown Stage 2 Wind Farm on native flora, fauna and ecological communities in the project site.

Legislative

If there is a possibility that proposed infrastructure may further impact on matters of national environmental significance under the EPBC Act 1999, the project proponent should:

- **Submit a referral under the *Environment Protection and Biodiversity Act 1999* for proposals with potential impacts for nationally threatened species and communities identified in the survey site.**

A referral was formally recommended if sites of the nationally critically endangered vegetation community Iron Grass (*Lomandra* spp.*)* Grasslands in the Snowtown Stage 2 survey site were to be impacted upon in any way. An EPBC referral, dated 29 January 2010, found that the proposed action '*to develop stage two of the Snowtown Wind Farm and associated transmission line, near Snowtown, South Australia'* was deemed not a controlled action (EPBC 2009/5073). No additional follow-up surveys are required as the existing grasslands did not qualify as the listed community under the EPBC Act.

Where possible, it is best to avoid disturbance to the grasslands, as these communities are poorly represented and are important for biodiversity within an already heavily degraded environment. A large patch of *L. effusa* Grassland and nearby *Allocasuarina verticillata* Woodland is present along the access track of WTG35-WTG37 (Figure 3). WTG37 is of particular concern, where the access track extends through Exotic Grassland and Cropping Land, to connect with the indicative underground cable route.

A number of migratory birds were highlighted in the EPBC search (EBS 2008) as possibly traversing across the project site. It is unlikely that these species will frequent the site and hence will not be impacted by the development of the proposed Stage 2 project.

If the proposed windfarm infrastructure requires additional removal of native vegetation within the survey site, the project proponent should:

- **Undertake consultation with the Native Vegetation Council for approvals**

All native vegetation within the project site is protected under the *Native Vegetation Act 1991* and any proposed clearance will need to comply with exemption 5(1)(d) *Building or provision of infrastructure, including infrastructure in the Public Interest,* or otherwise be assessed against native vegetation principles in a clearance application to the Native Vegetation Council.

Transmission Line

The native vegetation supported within the proposed transmission line alignment was of moderate to poor quality but does represent some of the only remaining remnant vegetation within the broader landscape. Much of the land has been disturbed and is now used for sheep grazing and cereal cropping.

The following actions are recommended for the proposed transmission line (option 3 – EBS 2010b):

- Minimise the site of native vegetation impacted upon by the transmission line;
- Locate transmission line towers in sites clear of mature trees, such as cropping land and exotic grasslands. All mature trees are either contained in roadside reserves or sparsely located within grazing paddocks with large open sites and therefore removal of mature trees should not be required;
- If native vegetation is to be cleared, undertake discussions with the Native Vegetation Council to determine the reporting and approval requirements under the *Native Vegetation Act 1991*;
- Ensure vegetation clearance is restricted to the project site;
- Where possible utilise sites for storage of excavated materials, which have been previously disturbed and contain no native vegetation;
- Ensure that construction machinery is clean and free from soil pathogens, such as Phytophthora and any weed seed materials. This includes performing appropriate hygiene when leaving the project site to avoid potential spread and
- Weed management strategies and hygiene practices should be implemented to ensure that weed species are not introduced or further spread throughout the project area.

Native Vegetation

- **Avoid identified remnant native vegetation associations and isolated trees**

Many of the native grasslands appeared to retain a density of tussocks that is absent from much of the Mid-north region. These sites should be avoided when constructing infrastructure associated with the proposed Stage 2 wind farm at Snowtown. Any proposals for clearance of native vegetation within the survey site need to be assessed against native vegetation clearance principles and/or referred to the Native Vegetation Council for approval under the *Native Vegetation Act* 1991.

Fauna

- **Implement a 300m buffer around known Wedge-tailed Eagle nests**

A 300 m buffer has been implemented by TrustPower as part of the mitigated design for the proposed Stage 2 wind farm. These are to be placed around active/non-active eagle nests that have been previously identified by EBS Ecology (EBS 2008; 2009). The 300m buffer was not applied to all nest clusters, which included Nest 6, 8 and 9. Nest 6 is likely to belong to one breeding pair (utilising nests 5, 6 and 7) and another breeding pair at Nests 8 and 9. It is unknown whether breeding pairs would utilise other nesting sites, given that eagles are territorial and may not allow other adults to intrude into other eagle territories. Where possible, it is recommended that construction of the proposed wind farm be outside key periods of the eagles breeding season i.e. early-July to early-August when Wedge-tailed Eagles are incubating and late-November to early-December when young eagles are just leaving the nest and attempting to fly.
It is proposed that future Wedge-tailed Eagle monitoring will incorporate:

  - three separate surveys to be undertaken between July and December 2012 to determine the breeding status of Wedge-tailed Eagles on site, whilst construction is underway
  - undertaking three surveys in 2013 to determine the breeding status of Wedge-tailed Eagles post construction (survey periods based on above timeframes).

Where a 300m buffer and avoidance of key periods is unattainable, there is likely to be some level of impact toward the species. Eagles on nest can be easily spooked by disturbance and the placement of turbines closer to nesting sites, increases the potential for collision between birds and turbines.

- **Monitor the breeding activity at all known nest locations**

Assess the activity of all known Wedge-tailed Eagle nests at the beginning of construction to ascertain any disturbance to breeding activities. Post construction monitoring is also recommended to determine what level of impact the wind farm may have had on resident eagles once the wind farm is active.

- **Regular long-term monitoring of bird mortality**

Due to the number of breeding pairs of Wedge-tailed Eagle at the proposed Stage 2 Snowtown wind farm (estimated at three pairs), it is recommended that dead-bird search methods are adopted post construction. This can be completed by TrustPower Australia staff and passed onto the relevant environmental agency (EBS Ecology in the first instance). This information is valuable, given the lack of data available on the interaction of raptors with wind farms in South Australia.

- **Possible additional bat surveys within the survey site**

No species of conservation significance were able to be positively identified from the AnaBat calls recorded during the 2008 survey (EBS 2008). However, several calls of the *Mormopterus* genus were recorded, some of which may be of conservation significance. Not enough information is available regarding bat species, numbers and distributions in the mid-north region. More data is always favourable to determine presence of bats and their utilisation of roosting and foraging habitat in this region.

Construction Phase

- **Implement best practice environmental management measures during any construction**

Environmental management measures should include:

  - Water roads regularly to reduce the dust level. Roads may also require regular maintenance (grading / rolling) to keep them as intact as possible.
  - Water stockpiles to reduce the amount of dust.
  - Regularly clean down vehicles and equipment, ensuring they are free of plant material and soil, to reduce the dispersal of exotic flora species into, out of and within the survey site.
  - Control declared and environmental weeds found within the site.
  - Minimise continual noise and vibration.

- **Minimise construction footprint**

Environmental management measures should include:

  - Keep disturbance of vegetation and soil to a minimum.
  - Strip topsoil and stockpile during any construction and re-spread over the disturbed site after construction has been completed. This will aid the recovery of the plants within the disturbed sites.
  - Avoid moving topsoil more than 500 m from where it was removed.
  - After construction, return the disturbed site to the same level as it was previously.
  - Use the access roads as stockpile sites in preference to any adjacent land.
  - Establish designated truck turn-around sites to minimise extra tracks and turn around sites.

8 RISK ASSESSMENT

A risk assessment matrix has been used to qualitatively define the risk of 'no action' on the recommendations made in this report. The assessment is an adaptation of the qualitative measures of likelihood and consequence used in the Australian Defense Risk Management Framework (DRMF) (Gaidow and Boey 2005).

The DRMF provided generic guidance on the introduction and ongoing implementation of a risk management process; it may be applied to different activities or operations of any corporate, community or public sector organisation, including the Department of Defence (Gaidow and Boey 2005). This risk assessment matrix considered the risk consequences (impact or magnitude of effect) and likelihood (measured by frequency or probability) of risk occurrence to combine them into the level of risk.

Likelihood was defined as how likely is, for example, mortality from collision with turbines to occur, or displacement of native vegetation by weeds or clearance, and consequence was defined by significance of associated impact on species viability (Table 14). A category of A to E was used to define likelihood, ranging from chronic (the event is expected to occur in most circumstances) to rarely (where the event may occur only in exceptional circumstances). A category of one to five was used to define consequence, where one equated to nil/insignificant (individuals may be affected, but viability of local population was not impacted) and five equated to catastrophic disaster (potential to lead to collapse of a species) (Table 14). Table 15 outlines the qualitative risk analysis matrix, which summarises four levels of impact: low, medium, high and extreme.

Table 16 displays results of the risk assessment analysis for the recommendations made in the report.

Table 64. Qualitative measures of likelihood and consequence (adopted from AS/NZS 4360:1999).

Rating Definition	
Likelihood (How likely is the event to occur)	**Consequence (Significance of associated impact on species or populations)**
A Chronic: The event is expected to occur in most circumstances	**5 Catastrophic Disaster**: potential to lead to collapse of species
B Frequent: The event probably will occur in most circumstances (e.g. weekly to monthly).	**4 Major**: Critical event, very likely to have significant impact on species
C Likely: The event should occur at some time i.e. once in a while	**3 Moderate**: likely to have impact on population, potential to impact on long term variability under some scenarios
D Unlikely: The event could occur at some time	**2 Minor**: may have impact on local population, no impact on species
E Rarely: The event may occur only in exceptional circumstances	**1 Insignificant**: individuals may be affected, but viability of local population not impacted

Table 75. Qualitative Risk Analysis Matrix – Level of Risk (adopted from AS/NZS 4360:1999 and HB 143:1999).

Likelihood	Consequences				
	Insignificant 1	Minor 2	Moderate 3	Major 4	Catastrophic 5
A (Chronic)	High	High	Extreme	Extreme	Extreme
B (Frequent)	Medium	High	High	Extreme	Extreme
C (Likley)	Low	Medium	High	Extreme	Extreme
D (Unlikely)	Low	Low	Medium	High	Extreme
E (Rarely)	Low	Low	Medium	High	High

Table 86. Risk assessment matrix of the proposed Snowtown Stage 2 Wind Farm.

Recommendation	Consequence (if not undertaken)	Likelihood of an event causing damage or mortality to native species	Consequence rating	Level of risk
Transmission Line				
Minimise the area of native vegetation impacted upon by the transmission line	Greater level of vegetation clearance than necessary	Unlikely	Insignificant	Low
Locate transmission line towers in sites clear of mature trees	Mature trees and valuable habitat removed	Unlikely	Insignificant	Low
Where possible utilise sites for storage of excavated materials, which have been previously disturbed and contain no native vegetation	Native vegetation smothered by stockpile materials, potentially causing death to plants	Unlikely	Insignificant	Low
Ensure that construction machinery is clean and free from soil pathogens, such as *Phytophthora*	Spread of *Phytophthora* onto property	Rarely	Insignificant	Low
Weed management strategies and hygiene practices should be implemented to ensure that weed species are not introduced or spread further	Further spread and introduction of weeds into project area	Frequent	Minor[2]	High
Native Vegetation				
Avoid identified remnant native vegetation associations and isolated trees	Mature trees and valuable habitat removed	Unlikely	Insignificant	Low
Fauna				
Wedge-tailed Eagles				
Implement a 300m buffer around known Wedge-tailed Eagle nests	Disturbance to nesting individuals	Likely	Insignificant	Low
	Death from collision (bird strike)	Unlikely	Insignificant	Low
Monitor the breeding activity at all known nest locations	Potential adverse impacts remain unknown	Unknown	Unknown	
Regular long-term monitoring of bird mortality	Potential adverse impacts remain unknown	Unknown	Unknown	
Bats				
Possible additional bat surveys within the survey site	Potential species and potential impacts remain unknown	Unknown	Unknown	

Recommendation	Consequence (if not undertaken)	Likelihood of an event causing damage or mortality to native species	Consequence rating	Level of risk
Construction Phase				
Water and maintain the tracks regularly to reduce the dust levels and overall damage.	Adverse dust impacts causing deterioration of native plant health. Deterioration of tracks causing deposition of sedimentation and erosion, potentially leading to smothering and/or undermining of native plants.	Likely	Insignificant	Low
Water stockpiles to reduce the amount of dust	Adverse dust impacts causing deterioration of native plant health.	Likely	Insignificant	Low
Minimise continual noise and vibration	Disturbance to native fauna	Likely	Insignificant	Low
Keep disturbance of vegetation and soil to a minimum.	Excessive loss of native plants and damage to soil (eg. erosion)	Unlikely	Insignificant	Low
Strip topsoil and stockpile during any construction and re-spread over the disturbed site after construction has been completed. This will aid the recovery of the plants within the disturbed sites.	Minimise natural regeneration	Frequent	Insignificant	Medium
Avoid moving topsoil more than 500 m from where it was removed.	Minimise regeneration of site specific plants	Unlikely	Insignificant	Low
After construction, return the disturbed site to the same level as it was previously.	Deterioration of site and reduction of ability to recover	Frequent	Insignificant	Medium
Use the access roads as stockpile sites in preference to any adjacent land	Native vegetation smothered by stockpile materials, potentially causing death to plants	Unlikely	Insignificant	Low
Establish designated truck turn-around sites to minimise extra tracks and turn around sites	Excessive loss of native plants	Unlikely	Insignificant	Low

Likelihood: Frequent – the event probably will occur in most circumstance, Likely – the event should occur at some time, Unlikely – the event could occur at some time, Rarely – the event may occur only in exceptional circumstances

Consequence: Insignificant - individuals may be affected, but viability of local population not impacted, Minor – the event may impact on local population, no impact on species, Moderate – the event is likely to have impact on population, potential to impact on long term variability under some scenarios

9 BIBLIOGRAPHY

AusWind (2006). *Best Practice Guidelines: for implementation of wind energy projects in Australia, December 2006*, accessed online February 2008 www.AusWind.org/downloads/bestpractice/AUSWINDBestPracticeGuidelines.pdf

Boland, C.R.J. (2004a). Breeding biology of Rainbow Bee-eaters (Merops ornatus): a migratory, colonial, cooperative bird. *Auk*. 121:811-823.

Brett Lane & Associates Pty Ltd (2004). *Proposed Waterloo Windfarm, Bird Utilisation Survey* Report No 2004.19(2.1), November 2004.

Carruthers, R.K. (1975). Banding and Observations of the Rainbow Bee-eater. *Aust. Bird Bander*. 13:71-4.

DEWR (2007). *EPBC Act Policy Statement 3.7, Nationally threatened Species and Ecological Communities, Peppermint Box (Eucalyptus odorata) Grassy Woodland of South Australia and Iron-grass Natural Temperate Grassland of South Australia,* June 2007, Australian Government, Department of the Environment and Water Resources.

DWLBC (2007) Guidelines for the Native Vegetation Significant Environment Benefit Policy for the clearance of scattered trees. Native Vegetation Council, Adelaide.

EBS (2008) *Snowtown Wind Farm Stage 2 – Ecological Assessment*, Report to Wind Prospect. Environmental and Biodiversity Services, Adelaide.

EBS (2009) *Snowtown Wind Farm Stage 2 – Flora and Fauna Targeted Assessment and Transmission Line Assessment*, Report to Wind Prospect. Environmental and Biodiversity Services, Adelaide.

EBS (2010a) *Snowtown Wind Farm Stage 2 – Pygmy Blue-tongue Presence / Absence Survey*, Report to Wind Prospect. Environmental and Biodiversity Services, Adelaide.

EBS (2010b) *Snowtown Wind Farm Stage 2, Transmission Line Survey – Option 3*, Report to Wind Prospect. Environmental and Biodiversity Services, Adelaide.

EBS (2010c) *Snowtown Stage 2 Wind Farm Native Vegetation Clearance Report.* Report to TrustPower Australia. EBS Ecology, Adelaide.

Gaidow, S. & Boey, S. (2005) *Australian Defence Risk Management Framework: A comparative study*. Commonwealth of Australia - DSTO Systems Sciences Laboratory.

Graham, A., Oppermann, A., & Inns, R.W. (2001). *Biodiversity Plan for the Northern Agricultural Districts*. Department of Environment and Heritage, South Australia.

Higgins, P.J. (ed.) (1999). Handbook of Australian, New Zealand and Antarctic Birds. Volume Four - Parrots to Dollarbird. Melbourne: Oxford University Press.

Lane, S.G. (1963). Notes on banding Rainbow Birds. *Australian Bird Bander*. 1:59-61.

Lill, A. (1993). Breeding of Rainbow Bee-eaters in southern Victoria. *Corella*. 17:100-106.

Menkhorst, P and Knight, F (2004) *A Field Guide to the Mammals of Australia*, Second edition. Oxford University Press.

Milne, T., Hutchinson, M. Clarke, S. (2000). Recovery Plan for the Pygmy Bluetongue Lizard (Tiliqua adelaidensis). Environment Australia.

Stokes, A., Heard, L.M.B., Carruthers, S., & Reynolds, T. (1998) *Guide to the Roadside Vegetation Survey Methodology for South Australia (Draft).* Geographic Analysis and Research Unit, Planning SA and Environment Unit, Transport SA, Department for Transport Urban Planning and the Arts.

Waterman, M.H. (1965). Notes on the Rainbow Bird in South Australia. *Australian Bird Bander*. 3:49.

10 APPENDICES

Appendix 1. Nationally threatened flora species highlighted by EPBC search (EBS 2008).

Scientific Name	Common Name	National rating	State rating
Caladenia macroclavia	Large-club Spider-orchid	EN	E
Caladenia tensa	Greencomb Spider-orchid, Rigid Spider-orchid	EN	
Olearia pannosa ssp. pannosa	Silver Daisy-bush	VU	V
Swainsona pyrophila	Yellow Swainson-pea	VU	R

Conservation Ratings

AUS - Commonwealth conservation status codes (as listed under the *Environment Protection and Biodiversity Conservation Act* 1999)
EN Endangered
VU Vulnerable
SA - State conservation status codes (as listed under the *National Parks and Wildlife Act* 1972)
E Endangered
V Vulnerable
R Rare

Appendix 2. Threatened flora species recorded within 10km of the survey (BDBSA search) (EBS 2008).

Scientific Name	Common Name	National rating	State rating	Number of records
Austrostipa pilata	Prickly Spear-grass		V	2
Bothriochloa macra	Red-leg Grass		R	1
Caladenia macroclavia	Large-club Spider-orchid	EN	E	1
Dampiera lanceolata var. intermedia	Aldinga Dampiera		E	1
Haegiela tatei	Small Nut-heads		R	1
Leptorhynchos elongatus	Lanky Buttons		R	1
Maireana decalvans	Black Cotton-bush		E	1
Maireana excavata	Bottle Fissure-plant		V	3
Maireana rohrlachii	Rohrlach's Bluebush		R	5
Olearia pannosa ssp. pannosa	Silver Daisy-bush	VU	V	5
Phebalium glandulosum ssp. glandulosum	Glandular Phebalium		E	1
Phlegmatospermum eremaeum	Spreading Cress		R	1
Podolepis jaceoides	Showy Copper-wire Daisy		R	1
Solanum eremophilum	Rare Nightshade		R	1
Thysanotus tenellus	Grassy Fringe-lily		R	2
Wurmbea latifolia ssp. latifolia	Broad-leaf Nancy		V	2

Cons

ervation Ratings
AUS - Commonwealth conservation status codes (as listed under the *Environment Protection and Biodiversity Conservation Act* 1999)
EN Endangered
VU Vulnerable
SA - State conservation status codes (as listed under the *National Parks and Wildlife Act* 1972)
E Endangered
V Vulnerable
R Rare

Appendix 3. Migratory bird species highlighted by EPBC search (EBS 2008).

Conservation Ratings

Scientific Name	Common Name	National rating	State rating	Habitat
Apus pacificus	Fork-tailed Swift	M	-	Marine
Ardea alba	Great Egret	M	-	Wetland
Gallinago hardwickii	Latham's Snipe	M	V	Wetland
Haliaeetus leucogaster	White-bellied Sea-eagle	M, Ma	V	Terrestrial
Hirunapus caudacutus	White-throated Needletail	M	-	Terrestrial
Merops ornatus	Rainbow Bee-eater	M, Ma	-	Terrestrial
Rostratula australis	Australian Painted Snipe	V, M	-	Wetland

AUS - Commonwealth conservation status codes (as listed under the *Environment Protection and Biodiversity Conservation Act* 1999)
EN Endangered
VU Vulnerable
SA - State conservation status codes (*National Parks and Wildlife Act* 1972)
E Endangered
V Vulnerable
R Rare

Appendix 4. Threatened fauna species recorded within 10km of the survey (BDBSA search) (EBS 2008).

Conservation Ratings

AUS - Commonwealth conservation status codes (as listed under the *Environment Protection and Biodiversity*

Class name	Scientific Name	Common Name	National rating	State rating	Number of records
AMPHIBIA	*Pseudophryne bibronii*	Brown Toadlet		R	1
AVES	*Burhinus grallarius*	Bush Stone-curlew		R	1
AVES	*Cladorhynchus leucocephalus*	Banded Stilt		V	1
AVES	*Coracina papuensis*	White-bellied Cuckoo-shrike		R	1
AVES	*Corcorax melanorhamphos*	White -winged Chough		R	1
AVES	*Falco peregrinus*	Peregrine Falcon		R	7
AVES	*Myiagra inquieta*	Restless Flycatcher		R	2
AVES	*Neophema elegans*	Elegant Parrot		R	10
AVES	*Pedionomus torquatus*	Plains-wanderer	VU	E	3
AVES	*Plectorhyncha lanceolata*	Striped Honeyeater		R	9
AVES	*Rostratula australis*	Australian Painted Snipe		V	1
AVES	*Turnix varia*	Painted Button-quail		R	4
MAMMALIA	*Neophoca cinerea*	Australian Sea-lion	VU	V	2
MAMMALIA	*Trichosurus vulpecula*	Common Brushtail Possum		R	4
REPTILIA	*Tiliqua adelaidensis*	Pygmy Bluetongue	EN	E	32

***Conservation Act* 1999)**

EN Endangered

VU Vulnerable

SA - State conservation status codes (as listed under the *National Parks and Wildlife Act* 1972)

E Endangered

V Vulnerable

R Rare

Appendix 5. A summary of the condition ratings used to rate vegetation communities across the project site.

Condition rating	Overview condition	Description
1	Excellent	Very little or no sign of alien vegetation in the understorey*; resembles probably pre-European condition.
2	Good	High proportion of native species and native cover in the understorey*; resonanble representation of probabley pre-European vegetation.
3	Moderate	Substantial invasion of aliens but native understorey* persists; for example, may be a low proportion of native species and a high native cover, or a high proportion of native species and low native cover.
4	Poor	The understorey* consists predominantly of alien species, although a small number of natives persist.
5	Very Poor	The understorey* consists only of alien species (however, isolated native may occur).

***Or all strata if the upper and lower strata are difficult to distinguish**
(Adapted from 'Guide to Roadside Vegetation Survey Methodology for South Australia', Stokes et al 1998).

Appendix 6. Wedge-tailed Eagle nest locations (as 2011).

Nest No	Easting	Northing	Location	Stage
2	235480	6262271	approx 300m from WTG48	2
3	235480	6262271	approx 300m from WTG48	2
4	235731	6262369	approx 450m from WTG48	2
5	233352	6251730	approx 300m from WTG24	2
6	233415	6251399	approx 200m from WTG20	2
7	233171	6251630	approx 400m from WTG24	2
8	233902	6248263	approx 300m from WTG8	2
9	233922	6248360	approx 300m from WTG9	2
10	233599	6246774	approx 350m from WTG4	2
11	234553	6246356	approx 450m from WTG2	2

EBS Ecology
4/48 Barwell Avenue
Kurralta Park, SA 5037
www.ebsecology.com.au
t. 08 7127 5607
f. 08 8297 3768

APPENDIX G

ENVIRONMENTAL NOISE ASSESSMENT REPORT (Sonus Pty Ltd)

Sonus Pty Ltd
17 Ruthven Avenue
ADELAIDE SA 5000
Phone: (08) 8231 2100
Facsimile: (08) 8231 2122
www.sonus.com.au
ABN: 67 882 843 130

Snowtown Wind Farm – Stage II

Environmental Noise Assessment

Prepared for

TrustPower Ltd
GPO Box 1512, Adelaide SA 5000

S2212C37
March 2012

INTRODUCTION

Sonus Pty Ltd has been engaged by TrustPower Ltd to conduct an environmental noise assessment of the proposed revision to Stage II of the Snowtown Wind Farm.

The environmental noise assessment of the proposed wind farm was previously made based on the use of Suzlon S88 turbines and is summarised in the Sonus Report "S2212C30" (the S2212C30 Report), dated June 2011. Currently, the wind farm developer is considering the use of Siemens turbines, comprising 23 Siemens SWT-3.0-101 turbines and 67 Siemens SWT-3.0-108 turbines. This report summarises the environmental noise assessment for this consideration.

Noise from the wind turbines and the substation at the proposed wind farm has been predicted at the nearby residences and compared against the applicable environmental noise criteria determined using the relevant South Australian Environment Protection Authority (EPA) "Wind farms, environmental noise guidelines"[1] (the Guidelines). The predicted noise levels also take into account the noise contribution from Stage I turbines and substation, and the prototype Suzlon S95 turbine which are currently constructed and operating.

The noise from the proposed wind farm to the residences in the vicinity was predicted based on the CONCAWE[2] noise propagation model and the sound power level data provided by the manufacturer of the turbines. The applicable environmental noise criteria were determined using the Guidelines based on background noise monitoring conducted in the vicinity of the wind farm, as outlined in the S2212C30 Report. The comparison between the predicted noise levels and the environmental noise criteria was made to ensure that the proposed wind farm design complies with the Guidelines.

---

[1] Environment Protection Authority of South Australia, "Wind farms, environmental noise guidelines", July 2009.

[2] CONCAWE - The oil companies' international study group for conservation of clean air and water – Europe, "The propagation of noise from petrochemical complexes to neighbouring communities", May 1981.

DEVELOPMENT PLAN

The subject land is located within a "Primary Production" Zone of the Wakefield Regional Council Development Plan.

Council Wide Objectives include:

Wakefield Regional Council Objective 2 (Renewable Energy Facilities)

Location, siting, design and operation of renewable energy facilities to avoid or minimise adverse impacts and maximise positive impacts on the environment, the local community and the State.

Council Wide Principles of Development Control include:

Wakefield Regional Council PDC 2 (Renewable Energy Facilities)

2. *Wind farms and ancillary development such as substations, maintenance sheds, access roads and connecting power-lines, should be sited, designed and operated in a manner that:*

   (a) avoids or minimises negative impacts on the character, ... or amenity of the area;

   …

   (e) avoids or minimizes nuisance or hazard to nearby property owners and/or occupiers, road users and wildlife by not:

   …

   (ii) creating excessive noise;

   …

All of the considered residences are located within a "Primary Production" Zone of the Development Plan.

CRITERIA

The South Australian EPA has developed environmental noise guidelines for noise from wind farms. The Guidelines provide the appropriate criteria to assess noise from the wind farm at residences which do not have a commercial agreement with the wind farm developer. For residences that have an agreement with the wind farm developer, reference is made to the WHO Guidelines[3] to ensure the project does not unreasonable interference the amenity of these residences.

Based on the EPA and the WHO Guidelines, the following noise criteria are applicable:

- ***for landholders without commercial agreement*** – 40 dB(A) or background noise ($L_{A90,10}$) plus 5 dB(A), whichever is greater;
- ***for landholders with commercial agreement*** – 45 dB(A) or background noise ($L_{A90,10}$) plus 5 dB(A), whichever is greater.

Background noise monitoring has been previously conducted at selected residences in the vicinity of the wind farm, between November 2003 and May 2005. At the time, an earlier version of the EPA guidelines existed, released in February 2003. The background noise monitoring was conducted in accordance this version of the guidelines.

The criteria for this assessment have been determined and the collected data have been used to determine the applicable criteria for each residence, as outlined in the S2212C30 Report. The assessment criteria are provided in the table below.

[3] "WHO Guidelines for Community Noise" World Health Organisation, 1999

Residence	Commercial Agreement	Criterion by 10m AGL Wind Speed (m/s)							
		3m/s	4 m/s	5 m/s	6 m/s	7 m/s	8 m/s	9 m/s	10 m/s
Davidson	Yes	45	45	45	45	45	45	47	48
Turner	Yes	45	45	45	45	46	48	50	52
Michael	Yes	45	45	45	45	46	48	50	52
Ross Na Ree	Yes	45	45	45	45	45	45	47	48
Wilson	Yes	45	45	45	45	45	45	46	47
Nicholls Lot 53	No	40	40	40	40	40	40	40	40
Percyton	No	40	42	44	46	48	50	52	53
Ebsary Section 97	Yes	45	45	45	46	48	50	52	53
Hayes	No	40	40	40	42	44	46	48	50
Venning Allotment 1	No	40	42	44	46	48	50	52	53
Kooliatta	Yes	45	45	45	45	45	45	45	45
Venning Section 104	No	40	42	44	46	48	50	52	53
Nicholls Section 296	No	40	40	40	40	40	40	40	40
Atkinsons	Yes	45	45	45	45	45	45	45	45
Gum Park	Yes	45	45	45	46	48	50	52	53
Cummins	Yes	45	45	45	45	45	46	48	50
Seafield Farm	Yes	45	45	45	45	45	45	45	46
Ebsary Section 771	Yes	45	45	45	45	45	45	45	45
Whitings	No	40	40	40	40	40	40	40	41
Jamiesons	Yes	45	45	45	45	45	45	45	46
Adalisa	No	40	40	40	40	42	44	45	46
Barunga Pastoral	No	40	40	40	40	42	44	45	46
Pine Lodge	No	40	40	40	40	42	44	46	47
Fountains	No	40	40	40	42	44	46	48	50
A Stringer	Yes	45	45	45	45	45	45	45	45
Burnsfield	Yes	45	45	45	45	45	46	48	50
Snowyview	No	40	40	40	40	40	40	40	41
E Stringer	No	40	40	40	40	40	40	41	43
G Stringer	Yes	45	45	45	45	45	45	45	45
Taloumbi	No	40	40	40	40	40	40	41	43
Irelands	No	40	40	40	40	40	40	41	43
Sharps Well	No	40	40	40	40	40	40	41	43
House 34	No	40	40	40	40	40	40	40	40
House 35	No	40	40	40	40	40	40	40	40
House 36	No	40	40	40	40	40	40	40	40
House 37	No	40	40	40	40	40	40	40	40
Maro Creek	Yes	45	45	45	45	45	45	45	45
House 39	No	40	40	40	40	40	40	40	41
Chelsea	No	40	40	40	40	40	40	40	40
Slattery	Yes	45	45	45	45	45	45	45	45
Kilkee	No	40	40	40	40	40	40	40	41

PREDICTED NOISE FROM WIND FARM

This environmental noise assessment has been prepared based on the easting and northing coordinates of wind turbines and substations for the two stages, and the prototype turbine on site (provided in Appendix C), which comprise:

- **Stage I**: 47 Suzlon S88 turbines and a 110MVA transformer;
- **Stage II**: 23 Siemens SWT-3.0-101 turbines, 67 Siemens SWT-3.0-108 and a 240MVA transformer; and,
- **Prototype**: 1 Suzlon S95 turbine.

All turbines above have a hub height of 80m.

The predictions of noise from the Suzlon and Siemens turbines have been based on the sound power level data provided by the manufacturer which corresponds to wind speed at 10m above ground level (AGL). These sound power levels have been used as background noise was correlated (prior to the 2009 Guidelines) against 10m high wind speed on the wind farm site, and these must be the same to meaningfully compare the predicted noise with the measured background noise

The predictions of noise from the transformer at the substations have been based on sound power level derived from the Australian Standard AS2374.6-1994[4]. The sound power levels for turbines and transformers used in the prediction model are given below.

Prior to the predictions, the manufacturer's data for the Siemens SWT-3.0-108 turbines which corresponds to a hub height of 89.5m were manipulated to obtain sound power levels for turbines with hub height of 80m.

[4] Australian Standard AS2374.6-1994, *Power Transformers Part 6: Determination of transformer and reactor sound levels.*

Stage I Noise Sources Sound Power Levels

Suzlon S88

Octave Band Data - A-Weighted Sound Power Level (dB(A))								
Freq (Hz) Bin	**10m AGL Wind Speed (m/s)**							
	3 m/s	**4 m/s**	**5 m/s**	**6 m/s**	**7 m/s**	**8 m/s**	**9 m/s**	**10 m/s**
62.5	82.8	82.8	83.5	84.6	86.7	89.0	90.1	90.2
125	93.1	93.1	93.8	94.9	96.8	98.4	98.8	98.4
250	97.6	97.6	98.3	99.4	101.2	101.9	102.7	102.0
500	98.3	98.3	99.0	100.1	100.4	101.1	101.6	101.5
1000	94.7	94.7	95.4	96.5	97.0	98.5	99.0	99.3
2000	91.2	91.2	91.9	93.0	95.3	96.7	97.8	97.6
4000	85.2	85.2	85.9	87.0	90.7	92.1	93.3	92.8
8000	74.8	74.8	75.5	76.6	80.7	82.1	82.3	83.0
Total	102.9	102.9	103.6	104.7	106.0	107.0	107.7	107.4

Transformer 33/132kV 110MVA

Octave Band Data - A-Weighted Sound Power Level (dB(A))								**Total (dB(A))**
62.5	**125**	**250**	**500**	**1000**	**2000**	**4000**	**8000**	
82.0	90.1	97.6	100.0	92.2	89.4	82.2	78.1	103.0

Stage II Noise Sources Sound Power Levels

Siemens SWT-3.0-101

Octave Band Data - A-Weighted Sound Power Level (dB(A))								
Freq (Hz) Bin	**10m AGL Wind Speed (m/s)**							
	3 m/s	**4 m/s**	**5 m/s**	**6 m/s**	**7 m/s**	**8 m/s**	**9 m/s**	**10 m/s**
62.5	81.1	81.1	81.1	81.1	81.8	82.8	82.8	82.8
125	92.3	92.3	92.3	92.3	93.7	94.7	94.7	94.7
250	96.4	96.4	96.4	96.4	100.4	101.4	101.4	101.4
500	100.0	100.0	100.0	100.0	103.7	104.7	104.7	104.7
1000	100.2	100.2	100.2	100.2	100.4	101.4	101.4	101.4
2000	96.8	96.8	96.8	96.8	92.5	93.5	93.5	93.5
4000	89.4	89.4	89.4	89.4	81.6	82.6	82.6	82.6
8000	85.1	85.1	85.1	85.1	78.3	79.3	79.3	79.3
Total	105.1	105.1	105.1	105.1	107.0	108.0	108.0	108.0

*Siemens SWT-3.0-108**

Octave Band Data - A-Weighted Sound Power Level (dB(A))								
Freq (Hz) Bin	**10m AGL Wind Speed (m/s)**							
	3 m/s	**4 m/s**	**5 m/s**	**6 m/s**	**7 m/s**	**8 m/s**	**9 m/s**	**10 m/s**
62.5	70.2	70.2	74.6	79.6	81.8	83.6	83.8	83.8
125	82.1	82.1	86.5	91.5	93.7	95.5	95.7	95.7
250	88.8	88.8	93.2	98.2	100.4	102.2	102.4	102.4
500	92.1	92.1	96.5	101.5	103.7	105.5	105.7	105.7
1000	88.8	88.8	93.2	98.2	100.4	102.2	102.4	102.4
2000	80.9	80.9	85.3	90.3	92.5	94.3	94.5	94.5
4000	70.0	70.0	74.4	79.4	81.6	83.4	83.6	83.6
8000	66.7	66.7	71.1	76.1	78.3	80.1	80.3	80.3
Total	95.4	95.4	99.8	104.8	107.0	108.8	109.0	109.0

Transformer 33/275kV 240MVA

Octave Band Data - A-Weighted Sound Power Level (dB(A))								Total (dB(A))
62.5	**125**	**250**	**500**	**1000**	**2000**	**4000**	**8000**	
86.0	94.1	101.6	104.0	96.2	93.4	86.2	82.1	107.0

Prototype Suzlon S95 Turbine Sound Power Levels

Octave Band Data - A-Weighted Sound Power Level (dB(A))								
Freq (Hz) Bin	**10m AGL Wind Speed (m/s)**							
	3 m/s	**4 m/s**	**5 m/s**	**6 m/s**	**7 m/s**	**8 m/s**	**9 m/s**	**10 m/s[5]**
62.5	79.8	81.1	83.2	85.4	86.4	86.4	84.0	84.0
125	90.8	92.1	94.2	96.4	97.4	97.4	95.0	95.0
250	95.7	97.0	99.1	101.3	102.3	102.3	99.9	99.9
500	97.6	98.9	101.0	103.2	104.2	104.2	101.8	101.8
1000	95.7	97.0	99.1	101.3	102.3	102.3	99.9	99.9
2000	93.4	94.7	96.8	99.0	100.0	100.0	97.6	97.6
4000	84.9	86.2	88.3	90.5	91.5	91.5	89.1	89.1
8000	65.3	66.6	68.7	70.9	71.9	71.9	69.5	69.5
Total	102.3	103.6	105.7	107.9	108.9	108.9	106.5	106.5

[5] The manufacturer has provided warranted sound power levels up to 9 m/s. The sound power level spectrum for 10 m/s has been based on the 9 m/s spectrum, which is considered to be conservative as it is expected that the sound power levels will decrease at wind speeds above 9 m/s.

The CONCAWE noise propagation model was used to model the noise from the turbines and transformer with the topography and worst case wind directions input to the model. The CONCAWE model is used around the world and is widely accepted as an appropriate noise propagation model. The assessment is based on the following meteorological conditions:

- Night
- No cloud
- 10°C air temperature
- 80% relative humidity

The Guidelines provide a default prediction method which incorporates hard ground in the noise propagation model unless justification is provided for using another input. The CONCAWE propagation model separates ground attenuation into the categories of hard ground and ground with finite acoustic impedance. CONCAWE states that hard ground should be used for surfaces such as concrete or water and all other surfaces including grass or soil should be considered as finite acoustic impedance. Considering the ground between the turbines and residences is mostly covered with grass or rough pasture, CONCAWE is clear that the ground should not be modelled as hard ground. Therefore, the ground was modelled as having finite acoustic impedance.

Results

The predicted noise levels (dB(A)) at residences in the vicinity of the wind farm (refer Appendix B for coordinates of residences considered), for worst case wind directions at each residence, are summarised in the table below along with the relevant criteria in accordance with the EPA and WHO Guidelines.

Residence	Noise Level by 10m AGL Wind Speed (m/s)															
	3m/s		4m/s		5m/s		6m/s		7m/s		8m/s		9m/s		10m/s	
	Criteria	Prediction	Criteria	Prediction	Criteria	Prediction	Criteria	Prediction	Criteria	Prediction	Criteria	Prediction	Criteria	Prediction	Criteria	Prediction
Davidson	***45***	36	***45***	36	***45***	38	***45***	42	***45***	44	***45***	45	***47***	45	***48***	45
Turner	***45***	42	***45***	42	***45***	42	***45***	42	***46***	45	***48***	46	***50***	46	***52***	46
Michael	***45***	37	***45***	37	***45***	39	***45***	43	***46***	45	***48***	46	***50***	47	***52***	47
Ross Na Ree	***45***	35	***45***	36	***45***	37	***45***	40	***45***	41	***45***	43	***47***	43	***48***	43
Wilson	***45***	26	***45***	26	***45***	30	***45***	35	***45***	38	***45***	39	***46***	40	***47***	40
Nicholls Lot 53	***40***	12	***40***	12	***40***	16	***40***	20	***40***	23	***40***	24	***40***	25	***40***	25
Percyton	***40***	37	***42***	37	***44***	38	***46***	40	***48***	41	***50***	42	***52***	43	***53***	43
Ebsary Section 97	***45***	36	***45***	37	***45***	37	***46***	39	***48***	40	***50***	41	***52***	42	***53***	41
Hayes	***40***	36	***40***	36	***40***	37	***42***	38	***44***	40	***46***	40	***48***	40	***50***	40
Venning Allotment 1	***40***	37	***42***	37	***44***	38	***46***	39	***48***	41	***50***	42	***52***	42	***53***	42
Kooliatta	***45***	29	***45***	29	***45***	31	***45***	35	***45***	38	***45***	39	***45***	39	***45***	39
Venning Section 104	***40***	36	***42***	36	***44***	37	***46***	39	***48***	40	***50***	41	***52***	42	***53***	41
Nicholls Section 296	***40***	12	***40***	12	***40***	16	***40***	21	***40***	23	***40***	25	***40***	25	***40***	25
Atkinsons	***45***	33	***45***	33	***45***	34	***45***	37	***45***	39	***45***	40	***45***	41	***45***	41
Gum Park	***45***	32	***45***	32	***45***	34	***46***	37	***48***	39	***50***	41	***52***	41	***53***	41
Cummins	***45***	31	***45***	31	***45***	32	***45***	32	***45***	35	***46***	36	***48***	36	***50***	36
Seafield Farm	***45***	34	***45***	34	***45***	34	***45***	35	***45***	37	***45***	38	***45***	39	***46***	38
Ebsary Section 771	***45***	32	***45***	32	***45***	35	***45***	39	***45***	41	***45***	43	***45***	43	***45***	43
Whitings	***40***	26	***40***	26	***40***	29	***40***	34	***40***	36	***40***	37	***40***	38	***41***	38
Jamiesons	***45***	34	***45***	34	***45***	35	***45***	36	***45***	38	***45***	39	***45***	39	***46***	39
Adalisa	***40***	34	***40***	34	***40***	34	***40***	35	***42***	37	***44***	38	***45***	38	***46***	38
Barunga Pastoral	***40***	33	***40***	33	***40***	34	***40***	35	***42***	37	***44***	38	***45***	38	***46***	38
Pine Lodge	***40***	29	***40***	29	***40***	33	***40***	39	***42***	41	***44***	42	***46***	43	***47***	43
Fountains	***40***	31	***40***	31	***40***	32	***42***	32	***44***	35	***46***	36	***48***	35	***50***	35
A Stringer	***45***	27	***45***	28	***45***	29	***45***	30	***45***	31	***45***	33	***45***	32	***45***	32
Burnsfield	***45***	30	***45***	30	***45***	31	***45***	32	***45***	34	***46***	36	***48***	36	***50***	36
Snowyview	***40***	25	***40***	25	***40***	28	***40***	32	***40***	34	***40***	35	***40***	36	***41***	36
E Stringer	***40***	32	***40***	32	***40***	33	***40***	35	***40***	36	***40***	38	***41***	38	***43***	38
G Stringer	***45***	30	***45***	30	***45***	32	***45***	35	***45***	38	***45***	39	***45***	40	***45***	39
Taloumbi	***40***	31	***40***	31	***40***	32	***40***	33	***40***	35	***40***	36	***41***	37	***43***	37
Irelands	***40***	32	***40***	33	***40***	33	***40***	35	***40***	37	***40***	38	***41***	38	***43***	38
Sharps Well	***40***	32	***40***	32	***40***	33	***40***	35	***40***	36	***40***	38	***41***	38	***43***	38
House 34	***40***	10	***40***	10	***40***	13	***40***	18	***40***	20	***40***	22	***40***	22	***40***	22
House 35	***40***	10	***40***	10	***40***	13	***40***	18	***40***	20	***40***	22	***40***	22	***40***	22
House 36	***40***	9	***40***	9	***40***	13	***40***	17	***40***	19	***40***	21	***40***	21	***40***	21
House 37	***40***	8	***40***	9	***40***	12	***40***	16	***40***	19	***40***	20	***40***	21	***40***	21
Maro Creek	***45***	21	***45***	21	***45***	25	***45***	30	***45***	32	***45***	34	***45***	34	***45***	34
House 39	***40***	22	***40***	22	***40***	25	***40***	30	***40***	32	***40***	34	***40***	34	***41***	34
Chelsea	***40***	15	***40***	15	***40***	19	***40***	24	***40***	26	***40***	28	***40***	28	***40***	28
Slattery	***45***	27	***45***	27	***45***	29	***45***	32	***45***	34	***45***	35	***45***	36	***45***	36
Kilkee	***40***	23	***40***	23	***40***	24	***40***	27	***40***	29	***40***	31	***40***	31	***41***	31

The above table indicates that the predicted noise levels from the proposed wind farm will achieve the relevant criteria at all residences. Appendix F provides predicted noise level contours under 9m/s wind speed (i.e., highest predicted noise levels) for four different wind directions (i.e., northerly, easterly, southerly and westerly winds).

CONCLUSION

An environmental noise assessment of the proposed Stage II of the Snowtown Wind Farm has been made. The assessment takes into account the noise contribution from the constructed and operating Stage I of the Snowtown Wind Farm and the prototype Suzlons S95 turbine.

The assessment indicates that for the proposed arrangement with a combined total of 90 Siemens turbines (23 Siemens SWT-3.0-101 turbines and 67 Siemens SWT-3.0-108 Siemens turbine), the predicted noise level from turbines and substations of Stages I and II, and the prototype turbine at:

- residences of landholders without an agreement with TrustPower in the vicinity of the development will achieve the requirements of the EPA 2009 Guidelines, and;
- residences of landholders with an agreement with TrustPower in the vicinity of development will achieve the requirements of the EPA 2009 Guidelines or the recommendations of the WHO Guidelines.

With the relevant noise criteria achieved, it is considered that the proposed wind farm has been located, sited and designed to avoid and minimise adverse noise, nuisance or hazard to nearby property owners or occupiers by way of excessive noise. Therefore, it is considered that Council Wide Objective 2 and Council Wide Principle of Development Control 2 for renewable energy facilities are achieved with respect to noise.

Appendix A: Nomenclature

The noise level terminology used is summarised below:

'A' Weighted	Frequency filter applied to measured noise levels to replicate the frequency response of the human ear.
dB(A)	'A' Weighted overall sound pressure level.
$L_{A90,10}$	The 'A' Weighted noise level exceeded 90% of a 10 minute measurement period. This descriptor is used to represent the background noise level.
$L_{Aeq,10}$	'A' weighted time based equivalent (or average) noise level measured over a 10 minute period.

Appendix B: Coordinates of Nearest Residences (WGS84 Map Datum)

Residence	Easting	Northing
Davidson	232694	6252327
Turner	235818	6264340
Michael	235856	6258923
Ross Na Ree	233925	6253393
Wilson	233025	6244948
Nicholls Lot 53	234530	6241586
Percyton	232192	6257562
Ebsary Section 97	232110	6260239
Hayes	240256	6273414
Venning Allotment 1	232077	6257806
Kooliatta	236885	6255643
Venning Section 104	232041	6257370
Nicholls Section 296	233071	6241787
Atkinsons	237618	6263901
Gum Park	232521	6254810
Cummins	242208	6270801
Seafield Farm	232291	6262555
Ebsary Section 771	237189	6257992
Whitings	236392	6253477
Jamiesons	233891	6266465
Adalisa	232558	6264318
Barunga Pastoral	232124	6262265
Pine Lodge	232079	6248729
Fountains	240491	6274362
A Stringer	235717	6274283
Burnsfield	241729	6268364
Snowyview	239533	6259683
E Stringer	234906	6268742
G Stringer	238768	6264411
Taloumbi	234232	6268242
Irelands	235642	6269990
Sharps Well	235643	6270158
House 34	235905	6240805
House 35	236402	6241125
House 36	236279	6240783
House 37	233231	6240073
Maro Creek	237012	6248785
House 39	237339	6251355
Chelsea	237656	6244694
Slattery	240921	6265342
Kilkee	241425	6263283

Appendix C: Coordinates of Turbines and Transformers (WGS84 Map Datum)

Stage 1

Turbine	Model	Easting	Northing
WTG1	Suzlon S88	238161	6272793
WTG2	Suzlon S88	238167	6272424
WTG3	Suzlon S88	238344	6272022
WTG4	Suzlon S88	238300	6271614
WTG5	Suzlon S88	238321	6271182
WTG6	Suzlon S88	238332	6270815
WTG7	Suzlon S88	238396	6270423
WTG8	Suzlon S88	238331	6269966
WTG9	Suzlon S88	238410	6269481
WTG10	Suzlon S88	238219	6269130
WTG11	Suzlon S88	238102	6268845
WTG12	Suzlon S88	238011	6268540
WTG13	Suzlon S88	237891	6268238
WTG14	Suzlon S88	237701	6267934
WTG15	Suzlon S88	237479	6267779
WTG16	Suzlon S88	237158	6267838
WTG17	Suzlon S88	237055	6267180
WTG18	Suzlon S88	236769	6267087
WTG19	Suzlon S88	236664	6266700
WTG20	Suzlon S88	236406	6266584
WTG21	Suzlon S88	236202	6266400
WTG22	Suzlon S88	235936	6266321
WTG23	Suzlon S88	235716	6266152
WTG24	Suzlon S88	234181	6262974
WTG25	Suzlon S88	234439	6262617
WTG26	Suzlon S88	234613	6261511
WTG27	Suzlon S88	234443	6261234
WTG28	Suzlon S88	234413	6260778
WTG29	Suzlon S88	233619	6260381
WTG30	Suzlon S88	233473	6259834
WTG31	Suzlon S88	233391	6259458
WTG32	Suzlon S88	233335	6259109
WTG33	Suzlon S88	234232	6259225
WTG34	Suzlon S88	234003	6259088
WTG35	Suzlon S88	233818	6258881
WTG36	Suzlon S88	233594	6258729
WTG37	Suzlon S88	233680	6258330
WTG38	Suzlon S88	233550	6258063
WTG39	Suzlon S88	233508	6257721
WTG40	Suzlon S88	233631	6257232
WTG41	Suzlon S88	233590	6256794
WTG42	Suzlon S88	233559	6256444
WTG83	Suzlon S88	234859	6262885
WTG100	Suzlon S88	233839	6260722
WTG101	Suzlon S88	234459	6259358
WTG102	Suzlon S88	234119	6258154
WTG109	Suzlon S88	234656	6256964
Transformer		**Easting**	**Northing**
110MVA		234985	6265949

Stage 2

Turbine	Option 2	Easting	Northing
II_01	SWT-3.0-108	233992	6245880
II_02	SWT-3.0-108	234066	6246177
II_03	SWT-3.0-108	234068	6246503
II_04	SWT-3.0-108	233939	6246819
II_05	SWT-3.0-108	233882	6247146
II_06	SWT-3.0-108	233858	6247470
II_07	SWT-3.0-108	233746	6247779
II_08	SWT-3.0-108	233718	6248107
II_09	SWT-3.0-108	233641	6248409
II_10	SWT-3.0-108	233618	6248716
II_11	SWT-3.0-108	233637	6249035
II_12	SWT-3.0-108	233598	6249334
II_13	SWT-3.0-108	233559	6249661
II_14	SWT-3.0-108	233558	6249963
II_15	SWT-3.0-108	233522	6250280
II_16	SWT-3.0-108	233505	6250601
II_17	SWT-3.0-108	233515	6250950
II_18	SWT-3.0-108	234509	6251233
II_19	SWT-3.0-108	233942	6251242
II_20	SWT-3.0-108	233588	6251247
II_21	SWT-3.0-108	234384	6251581
II_22	SWT-3.0-108	233938	6251587
II_23	SWT-3.0-108	234285	6251890
II_24	SWT-3.0-108	233431	6251984
II_25	SWT-3.0-108	234221	6254501
II_26	SWT-3.0-108	234296	6254876
II_27	SWT-3.0-108	234241	6255253
II_28	SWT-3.0-108	235351	6255314
II_29	SWT-3.0-108	235008	6255486
II_30	SWT-3.0-108	234667	6255608
II_31	SWT-3.0-108	234143	6255610
II_32	SWT-3.0-108	234105	6256078
II_33	SWT-3.0-108	234207	6256497
II_34	SWT-3.0-108	235010	6257832
II_35	SWT-3.0-108	234667	6257872
II_36	SWT-3.0-108	235351	6257920
II_37	SWT-3.0-108	235667	6257959
II_38	SWT-3.0-108	237205	6259093
II_39	SWT-3.0-108	236936	6259372
II_40	SWT-3.0-108	236638	6259631
II_41	SWT-3.0-108	236360	6259994
II_42	SWT-3.0-108	236561	6260424
II_43	SWT-3.0-108	236438	6260923
II_44	SWT-3.0-108	237288	6261430
II_45	SWT-3.0-108	236913	6261471
II_46	SWT-3.0-108	236386	6261479
II_47	SWT-3.0-108	236697	6261875
II_48	SWT-3.0-108	235510	6261951
II_49	SWT-3.0-108	236183	6262056
II_50	SWT-3.0-108	236516	6262243
II_51	SWT-3.0-108	236901	6262409
II_52	SWT-3.0-101	235238	6262512
II_53	SWT-3.0-101	235348	6262954
II_54	SWT-3.0-101	234404	6263315

Turbine	Option 2	Easting	Northing
II_55	SWT-3.0-101	235015	6263316
II_56	SWT-3.0-101	235459	6263466
II_57	SWT-3.0-101	234424	6263648
II_58	SWT-3.0-101	234624	6264031
II_59	SWT-3.0-101	234726	6264374
II_60	SWT-3.0-101	234944	6264740
II_61	SWT-3.0-108	236714	6266214
II_62	SWT-3.0-108	238388	6266378
II_63	SWT-3.0-108	238061	6266385
II_64	SWT-3.0-108	237738	6266421
II_65	SWT-3.0-108	237418	6266484
II_66	SWT-3.0-108	237089	6266610
II_67	SWT-3.0-108	237481	6267002
II_68	SWT-3.0-108	238868	6267012
II_69	SWT-3.0-108	238379	6267050
II_70	SWT-3.0-108	237796	6267062
II_71	SWT-3.0-108	238174	6267386
II_72	SWT-3.0-108	238761	6267472
II_73	SWT-3.0-108	237867	6267546
II_74	SWT-3.0-108	238575	6267798
II_75	SWT-3.0-108	238339	6268110
II_76	SWT-3.0-108	238527	6268426
II_77	SWT-3.0-101	238640	6269039
II_78	SWT-3.0-101	239156	6269600
II_79	SWT-3.0-101	238833	6269641
II_80	SWT-3.0-101	238748	6270511
II_81	SWT-3.0-101	239686	6270892
II_82	SWT-3.0-101	238674	6270976
II_83	SWT-3.0-101	239948	6271042
II_84	SWT-3.0-101	238973	6271092
II_85	SWT-3.0-101	240213	6271226
II_86	SWT-3.0-101	239205	6271301
II_87	SWT-3.0-101	238689	6271931
II_88	SWT-3.0-101	238610	6272317
II_89	SWT-3.0-101	238930	6272433
II_90	SWT-3.0-101	239041	6272778
Transformer		**Easting**	**Northing**
240MVA		233336	6252971

Prototype

Turbine	Model	Easting	Northing
WTG44	Suzlon S95	238391	6273115

Appendix D: Nearest turbine to the residences

Residence	Easting	Northing	Closest Turbine	Distance to Closest Turbine (m)	Bearing from True North to Closest Turbine (°)
Davidson	232694	6252327	II_24	813	115
Turner	235818	6264340	II_56	945	202
Michael	235856	6258923	II_37	982	191
Ross Na Ree	233925	6253393	II_25	1147	15
Wilson	233025	6244948	II_01	1343	46
Nicholls Lot 53	234530	6241586	II_01	4328	353
Percyton	232192	6257562	WTG39	1326	83
Ebsary Section 97	232110	6260239	WTG30	1422	107
Hayes	240256	6273414	II_90	1371	242
Venning Allotment 1	232077	6257806	WTG39	1434	93
Kooliatta	236885	6255643	II_28	1569	258
Venning Section 104	232041	6257370	WTG39	1508	77
Nicholls Section 296	233071	6241787	II_01	4195	13
Atkinsons	237618	6263901	II_51	1655	206
Gum Park	232521	6254810	II_25	1728	100
Cummins	242208	6270801	II_85	2040	282
Seafield Farm	232291	6262555	WTG24	1936	78
Ebsary Section 771	237189	6257992	II_38	1101	1
Whitings	236392	6253477	II_28	2111	330
Jamiesons	233891	6266465	WTG23	1852	100
Adalisa	232558	6264318	II_57	1983	110
Barunga Pastoral	232124	6262265	WTG24	2176	71
Pine Lodge	232079	6248729	II_10	1539	90
Fountains	240491	6274362	II_90	2147	222
A Stringer	235717	6274283	WTG1	2862	121
Burnsfield	241729	6268364	II_78	2854	296
Snowyview	239533	6259683	II_38	2402	256
E Stringer	234906	6268742	WTG16	2427	112
G Stringer	238768	6264411	II_62	2003	349
Taloumbi	234232	6268242	WTG23	2563	145
Irelands	235642	6269990	WTG16	2632	145
Sharps Well	235643	6270158	WTG8	2695	94
House 34	235905	6240805	II_01	5424	339
House 35	236402	6241125	II_01	5331	333
House 36	236279	6240783	II_01	5587	336
House 37	233231	6240073	II_01	5857	7
Maro Creek	237012	6248785	II_08	3363	258
House 39	237339	6251355	II_18	2833	268
Chelsea	237656	6244694	II_01	3851	288
Slattery	240921	6265342	II_68	2646	309
Kilkee	241425	6263283	II_62	4336	316

Appendix E: Siemens Turbines Sound Emission

SIEMENS

SWT-3.0-101, Hub Height 80 m
Acoustic Emission

Sound Power Levels

The warranted sound power levels are presented with reference to the code IEC 61400-11:2002 with amendment 1 dated 2006-05 based on a hub height of 80 m and a roughness length of 0.05 m as described in the IEC code. The sound power levels (Lwa) presented are valid for the corresponding wind speeds referenced to a height of 10 m above ground level.

Wind speed [m/s]	6	7	8	9	10
Sound power level	105.1	107.0	108.0	108.0	108.0

Table 1: Noise emission, Lwa [dB(A) re 1 pW]

Typical Octave Band

Typical, not warranted octave band spectra are tabulated below for 6 and 8 m/s referenced to 10 m height.

Octave band, centre frequency [Hz]	63	125	250	500	1000	2000	4000	8000
Sound power level	81.1	92.3	96.4	100.0	100.2	96.8	89.4	85.1

Table 2: Typical octave band for 6 m/s

Octave band, centre frequency [Hz]	63	125	250	500	1000	2000	4000	8000
Sound power level	82.8	94.7	101.4	104.7	101.4	93.5	82.6	79.3

Table 3: Typical octave band for 8 m/s

Noise Restricted Operation

Lower sound power levels can be achieved with the SWT-3.0-101 wind turbine by controlling the turbine in noise restricted operation. This noise restricted mode of operation will, depending on the mode, have an impact on the power output of the turbine. Please contact Siemens for further information on this option.

SIEMENS

SWT-3.0-108, Hub Height 89.5 m
Standard Acoustic Emission

Typical Sound Power Levels

The typical sound power level is presented with reference to the code IEC 61400-11:2002 with amendment 1 dated 2006-05 based on a hub height of 89.5 m and a roughness length of 0.05 m as described in the IEC code. The sound power levels (L_{WA}) presented are valid for the corresponding wind speeds referenced to a height of 10 m above ground level.

Wind speed [m/s]	4	5	6	7	8	9	10	11	12	Up to cut-out
Standard setting	95.1	99.8	105.1	107.0	109.0	109.0	109.0	109.0	109.0	109.0
"Setting -1 dB"	95.1	99.8	104.2	106.0	108.0	108.0	108.0	108.0	108.0	108.0
"Setting -2 dB"	95.1	99.8	103.2	105.0	107.0	107.0	107.0	107.0	107.0	107.0
"Setting -3 dB"	95.1	99.4	102.2	104.0	106.0	106.0	106.0	106.0	106.0	106.0
"Setting -4 dB"	95.1	98.6	101.2	103.0	105.0	105.0	105.0	105.0	105.0	105.0
"Setting -5 dB"	95.0	97.7	100.2	102.0	104.0	104.0	104.0	104.0	104.0	104.0
"Setting -6 dB"	95.0	97.5	99.7	101.2	103.0	103.0	103.0	103.0	103.0	103.0

Table 1: Noise emission, L_{WA} [dB(A) re 1 pW]

Typical Octave Band

Typical, not warranted octave band spectra are tabulated below for 8 m/s referenced to 10 m height.

Octave band, centre frequency [Hz]	63	125	250	500	1000	2000	4000	8000
Standard setting	83.8	95.7	102.4	105.7	102.4	94.5	83.6	80.3
"Setting -1 dB"	83.7	95.4	101.4	104.5	101.5	93.7	83.1	79.9
"Setting -2 dB"	83.8	95.2	100.5	103.4	100.7	93.0	82.8	79.6
"Setting -3 dB"	83.8	94.8	99.3	102.1	99.8	92.0	82.3	79.2
"Setting -4 dB"	83.9	94.6	98.3	100.9	98.9	91.3	82.0	78.9
"Setting -5 dB"	83.7	94.1	97.3	99.7	97.9	90.3	81.3	78.3
"Setting -6 dB"	83.8	93.9	96.1	98.5	97.1	89.4	80.9	78.0

Table 2: Typical octave band for 8 m/s, L_{WA} [dB(A) re 1 pW]

Noise Restricted Operation

The lower sound power levels presented for "Setting -1 dB" to "Setting -6 dB" are achieved by controlling the SWT-3.0-108 wind turbine in a noise restricted mode of operation. This noise restricted mode of operation will, depending on the mode, have an impact on the power output of the wind turbine. Please contact Siemens for further information on this option.

Appendix F: Predicted Noise Level Contours

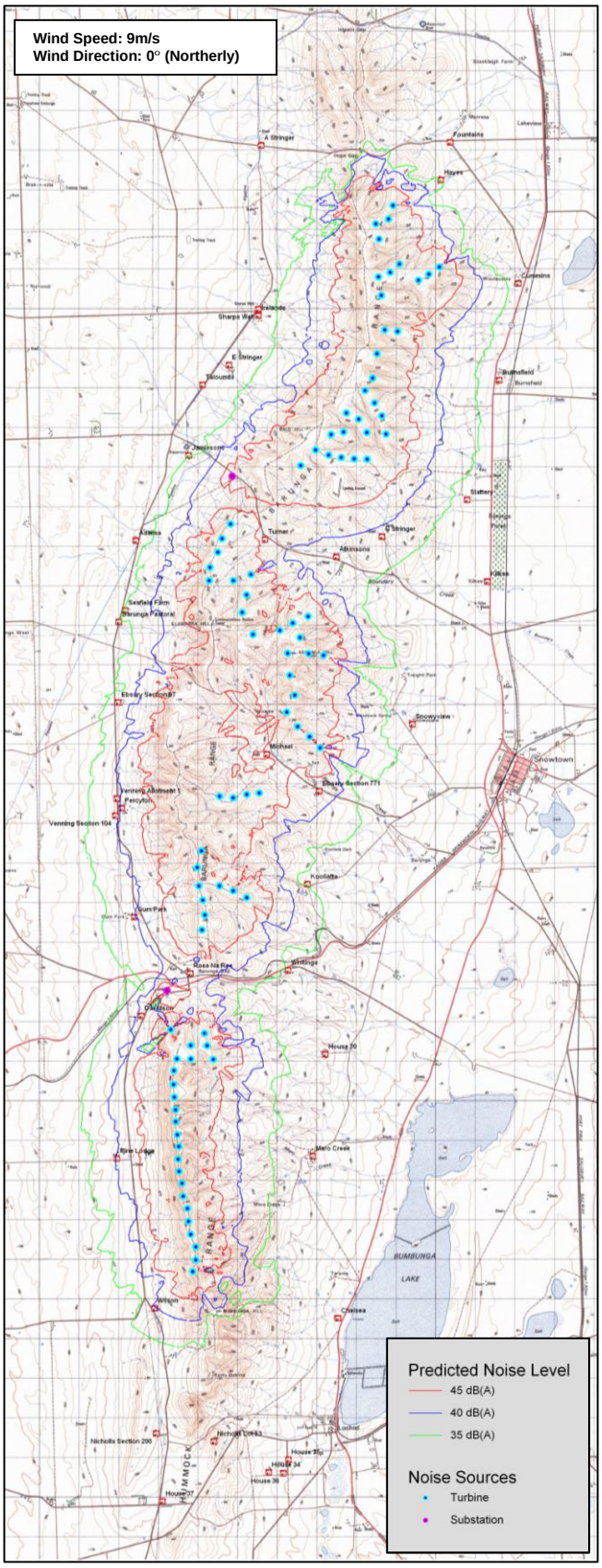
Wind Speed: 9m/s
Wind Direction: 0° (Northerly)
Predicted Noise Level
45 dB(A)
40 dB(A)
35 dB(A)
Noise Sources
Turbine
Substation

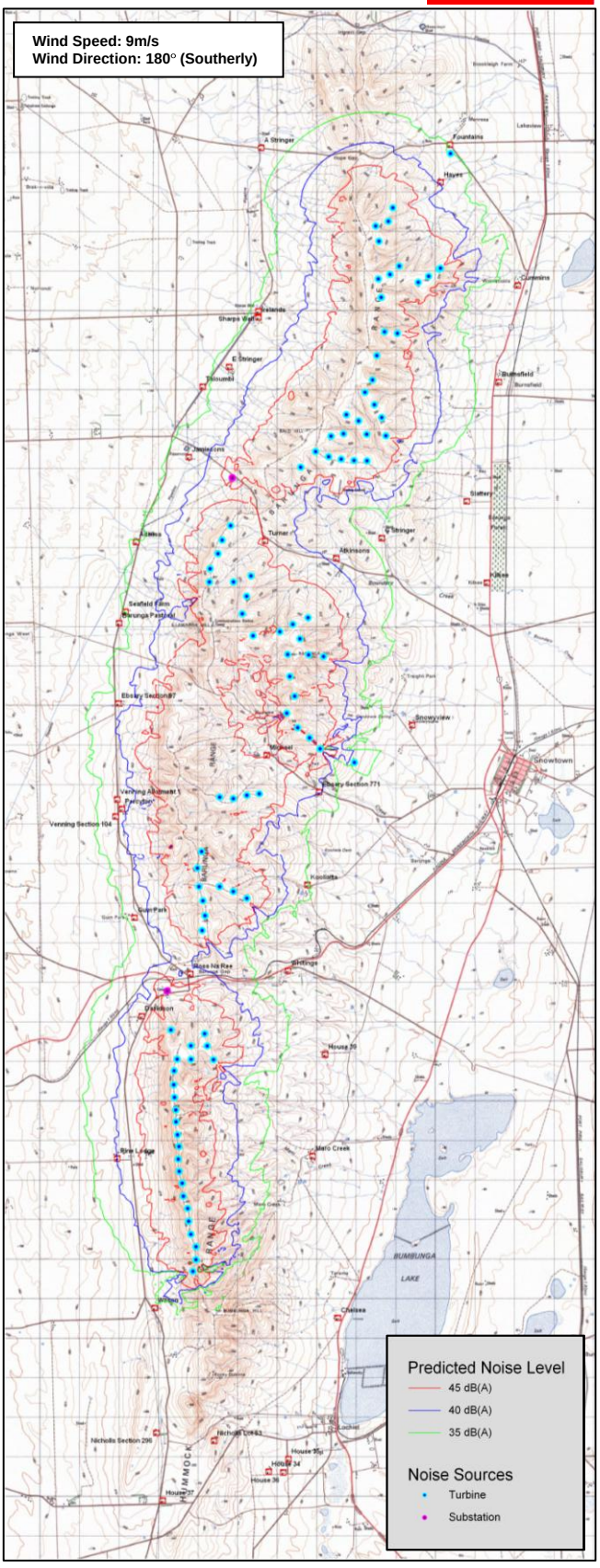
Wind Speed: 9m/s
Wind Direction: 180° (Southerly)
Predicted Noise Level
45 dB(A)
40 dB(A)
35 dB(A)
Noise Sources
Turbine
Substation

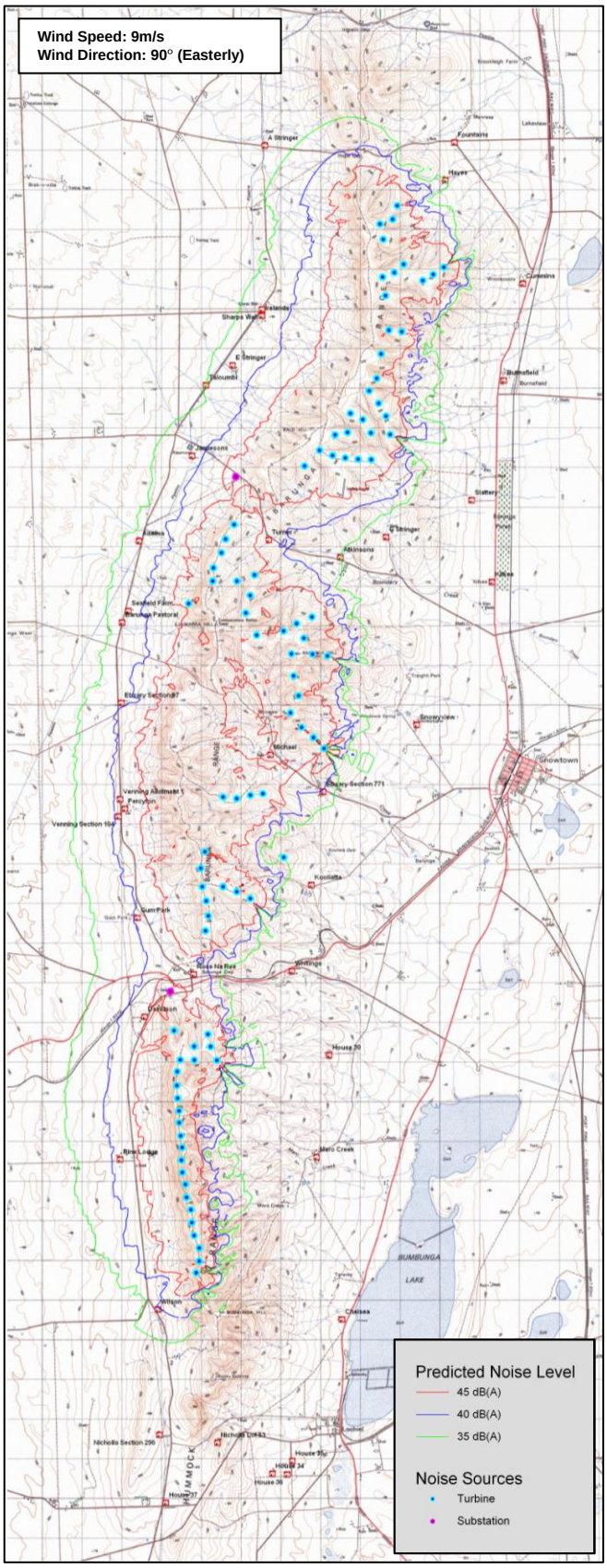
Wind Speed: 9m/s
Wind Direction: 90° (Easterly)
Predicted Noise Level
45 dB(A)
40 dB(A)
35 dB(A)
Noise Sources
Turbine
Substation

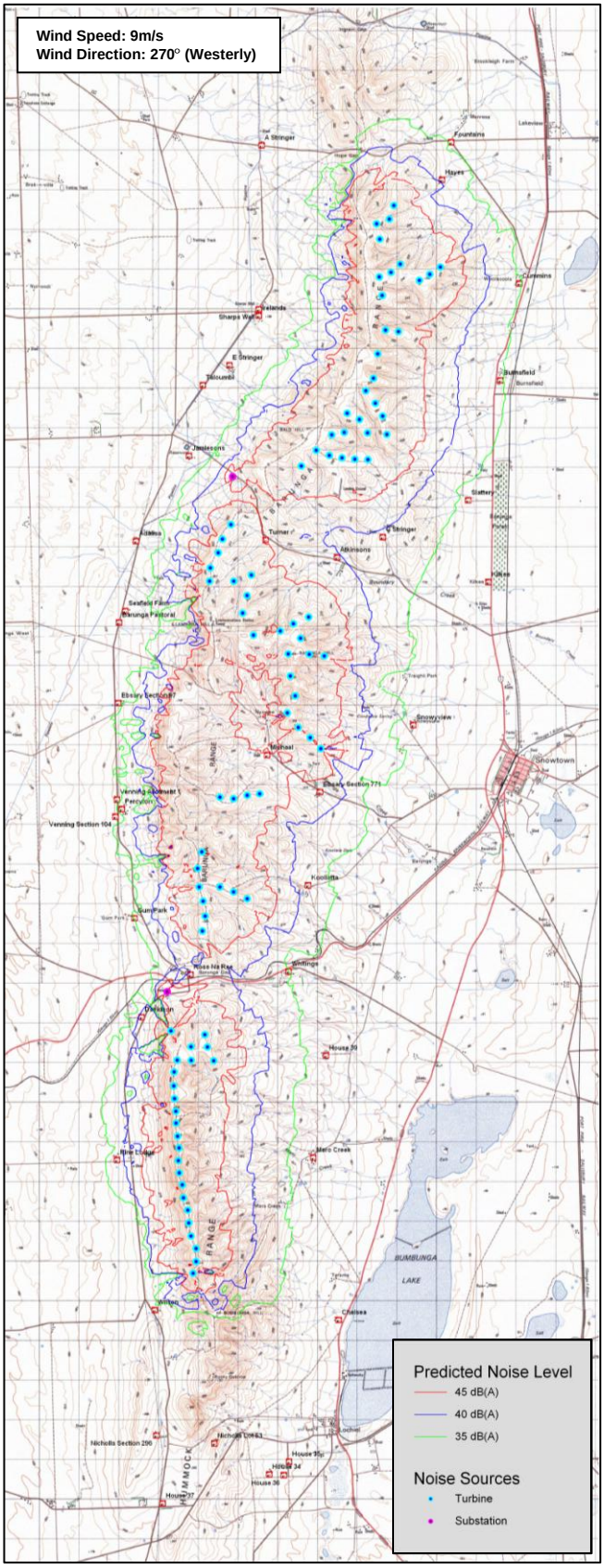
Wind Speed: 9m/s
Wind Direction: 270° (Westerly)
Predicted Noise Level
45 dB(A)
40 dB(A)
35 dB(A)
Noise Sources
Turbine
Substation

APPENDIX H

NATIVE VEGETATION COUNCIL APPROVAL

Native Vegetation Council

Reference: NVAP Mtg 32 Item 2.1; 11NRM0131
File: 2011/3008/260

Contact: Peter Farmer
Telephone: 8303 9336

Hannaford Building,
Entry 3, Waite Rd,
Urrbrae SA 5064

GPO Box 2834
Adelaide SA 5001

Ph| 08 8303 9777
Fx| 08 8303 9780

nvc@sa.gov.au

16 May 2011

TrustPower
GPO Box 1512
ADELAIDE SA 5001

cc: NRM Board, Regional Council

REGULATION ADVICE NOTIFICATION

Regulation 5(1)(d) – Clearance for building or provision of infrastructure

Dear Mr Van Zyl,

At its meeting on 9 March 2011 the Native Vegetation Assessment Panel (NVAP) considered the matter of clearance, based on information provided in the data report "*Snowtown wind farm Stage 2 Native Vegetation Clearance Report*" prepared by EBS.

The NVAP would like to thank you, Tonia Brown and Catherine Lynch for attending the meeting. The native vegetation clearance associated with installing the wind farm (as shown on the *Regulation Advice Plan*) for Snowtown Stage 2 wind farm was assessed in accordance with Regulation 5(1)(d) – clearance for provision of infrastructure (Attachment 1).

Assessment Advice

The Native Vegetation Council is satisfied that clearance is required for the provision of infrastructure (in accordance with part (i) of the Regulation) and that clearance has been minimised in the planning stage (part (iv)).

The NVAP endorsed the proposed clearance totalling 82.9267ha of degraded remnant grassland, shrubland, mallee and woodland as described in the Snowtown Wind Farm Stage 2 Native Vegetation Clearance Report (including plans SWF2 Appendix A (Location Map), Figures 1-8 of the report) to be exempt under Regulation 5(1)(d) for the purpose of developing Stage 2 of the Snowtown Wind Farm by TrustPower Australia Holdings Pty Ltd and their assignees, **subject to meeting the SEB requirements**:

- Native vegetation clearance on site is not to occur until:
  - full development approval is granted under the Development Act from the Wakefield Regional Council, and
  - final layout revisions and association changes in proposed native vegetation clearance and required SEB, if any are submitted to the Native Vegetation Council Secretariat and endorsed prior to vegetation clearance being undertaken.
  - Construction Environmental Management Plan is submitted for approval prior to clearance, to the satisfaction of the Native Vegetation Council Secretariat. *If required* the plan should be to the satisfaction of Wakefield Regional Council & the Commonwealth Government under the EPBC Act. The plan should address

- Weed Management
- Flora and Fauna Management
- Site Rehabilitation Management, including regeneration & re-vegetation works

- A suitable on ground SEB is to be identified. To this end it understood that TrustPower is to enter into dialogue with the Mid North Grasslands Working Group and/or other interested Landholders regarding the identification of suitable on ground SEB opportunities. Once identified TrustPower is to submit information on the SEB proposal to the NVAP. If endorsed a detailed management plan will need to be developed in an agreed timeframe (to be determined) and implemented shortly after. The balance of SEB not met by on ground SEB is to be discharged by payment in the Native Vegetation Fund. As an example if a SEB area of **42.8655ha** (works include regeneration, re-vegetation & weed management) is proposed a balance of **$206,657.75** SEB payment to the Fund would be required. Alternatively if an on ground SEB is not viable or available, payment of **$333,410.90** into the Native Vegetation Fund is required, to achieve the significant environmental benefit required by the Native Vegetation Regulation. Note: the total on ground SEB area of 90.3177 ha or payment equivalent of $333,410.90 is required to offset the proposed clearance.

Significant Environmental Benefit (SEB) requirements

A requirement under part (v) of Regulation 5(1)(d) is the achievement by the applicant of a SEB to offset the proposed clearance. In the discussions Trust Power agreed to investigate suitable on ground SEB opportunities (as detailed above) and if successful then satisfy the SEB requirements by undertaking a mix of on ground SEB works over an area to be determined with the balance discharged by payment into the Native Vegetation Fund.or alternatively if the on ground SEB is not viable or available, payment of **$333,410.90** into the Native Vegetation Fund.

Please complete the attached form, "*Understanding of Regulation Advice*" (including signature and date) within one month of receiving it, to confirm with the Native Vegetation Council Secretariat that you fully understand the Advice and Conditions detailed in this letter.

Therefore, clearance for Snowtown Stage 2 wind farm is exempt under *Regulation 5(1)(d) - building or infrastructure in the public interest*.

Please contact Peter Farmer on the telephone number provided above if you have any questions.

Yours sincerely

24/5/11

Mike Hodder
Delegate
Native Vegetation Council

Attachment 1

Note: Please refer to the full wording of the Regulation in the "*Guide to the Native Vegetation Regulations 2003*" which is available from the following web site link:
http://www.nvc.sa.gov.au/assets/files/NV_REGS_GUIDE_SEP_09.pdf

5(1)(d) Building or provision of infrastructure, including infrastructure in the Public Interest

Pursuant to Section 27(1)(b) of the Act, native vegetation may, subject to any other Act or law to the contrary, be cleared if—

(i) —

(A) the clearance is incidental to the construction or expansion of a building or infrastructure and the Minister has, by instrument in writing, declared that he or she is satisfied that the clearance is in the public interest; or

(B) the clearance is required in connection with the provision of infrastructure or services to a building or proposed building, or to any place; and

(ii) any development authorisation required by or under the *Development Act 1993* has been obtained; and

(iii) the Council is satisfied (on the basis of information provided to the Council by the person seeking the benefit of this paragraph and such other information as the Council thinks fit) that, after taking into account the need to preserve biological diversity and the nature and purposes of any proposed building or infrastructure that is yet to be constructed, the proposed site of the building or infrastructure is the most suitable that is available; and

(iv) the Council is satisfied (on the basis of information provided to the Council by the person seeking the benefit of this paragraph and such other information as the Council thinks fit) that, there is no other practicable alternative that would involve no clearance or the clearance of less vegetation or the clearance of vegetation that is less significant or (if relevant) the clearance of vegetation that has been degraded to a greater extent than the vegetation proposed to be cleared; and

(v) the clearance is undertaken in accordance with a standard operating procedure determined or approved by the Council for the purposes of this provision or a management plan that has been approved by the Council, and either—

(A) there will be a significant environmental benefit on the property where the clearance is being undertaken or within the same region of the State; or

(B) either—

- the owner of the land (or a person acting on his or her behalf); or
- a person connected with the construction or expansion of the building or infrastructure, or the provision of the infrastructure or services (as the case requires),

has, on application to the Council to proceed with clearing the vegetation in accordance with this provision, made a payment into the Fund of an amount considered by the Council to be sufficient to achieve a significant environmental benefit in the manner contemplated by section 21(6) of the Act.

Definition of intact stratum

A substantially intact stratum of native vegetation is defined by sn 3A of the Native Vegetation Act 1991 as an area that, in the opinion of the Native Vegetation Council, has not been seriously degraded by human activity (but not degradation that has been caused by fire) during the immediately preceding period of 20 years.

A 'stratum' of native vegetation means a layer of a plant community consisting of plants that comprise native vegetation that have a similar growth habit. An area may be considered to have an intact stratum, even if another stratum is degraded.

Note: *Please read the Regulation Advice Notification and sign the form underneath to acknowledge that you have understood the Advice made by the Native Vegetation Council, and return by fax or post to:*

Send to: Secretary, Native Vegetation Council
GPO Box 1047
Adelaide SA 5001

Fax to: 8303 9780

UNDERSTANDING OF REGULATION ADVICE

File: **2011/3008/373 TrustPower**
Document No.: **11NRM0131**

I clearly understand the Native Vegetation Council's Regulation Advice Notification, the conditions associated with clearance and the Regulation Advice Plan(s).

I have read and fully understand the:

☐ ***Regulation Advice Notification and the Conditions attached to the Advice***

(and)

☐ ***The Regulation Advice Plan*** (refer to: Snowtown Wind Farm Stage 2 Native Vegetation Clearance Report (including plans SWF2 Appendix A (Location Map), Figures 1-8 of the report)

Name of Landowner(s) or Company: .....

Signature of Landowner(s) or seal of Company and authorised signatory:
(Please note that the landowner [not agent] must sign here

.....

.....

.....

.....

Date : .....

APPENDIX I

EPBC REFERRAL DECISION

Australian Government

Department of the Environment, Water, Heritage and the Arts

Notification of
REFERRAL DECISION – not controlled action

Development of Snowtown Wind farm, near Snowtown, SA (EPBC 2009/5073)

This decision is made under Section 75 of the *Environment Protection and Biodiversity Conservation Act 1999* (EPBC Act).

Proposed action

person named in the referral	Trustpower Pty Ltd
proposed action	To develop and build stage two of the Snowtown Wind Farm, including the construction of up to 102 wind turbines and associated infrastructure, on land along the Hummock and Barunga Ranges, 6km west of Snowtown, South Australia (see EPBC Act referral number 2009/5073).

Referral decision: Not a controlled action

status of proposed action	The proposed action is not a controlled action.

Person authorised to make decision

Name and position	Ms Vicki Middleton Assistant Secretary Environment Assessment Branch
signature	Vicki Middleton
date of decision	29 **January 2010**

APPENDIX J

HERITAGE SURVEYS

APPENDIX K

AIRSERVICES AUSTRALIA ADVICE

Rontheo Van Zyl

From: Fiumara, Carly [carly.fiumara@AirservicesAustralia.com]
Sent: Wednesday, 25 January 2012 2:32 p.m.
To: Rontheo Van Zyl
Cc: Doherty, Joe
Subject: ASA RESPONSE: Snowtown Wind Farm Stage 2 (SA-WF-008 P2)
Attachments: Wind Farm Aviation Study.doc

Hi Rontheo,

As discussed with Joe Doherty yesterday, Airservices has completed its assessment of stage two for the Snowtown Wind Farm in South Australia.

With respect to ICAO PANS-OPS procedures promulgated by Airservices Australia, at a height of, 548.5m/1800ft AHD, across the whole area of the Snowtown Wind Farm (stage 2); the proposed wind farm will not affect any instrument sector or circling altitude, nor any instrument approach or departure procedures at Port Pirie aerodrome.

With respect to ICAO PANS-OPS procedures promulgated by Airservices Australia, at a height of , 548.5m/1800ft AHD, across the whole area of the wind farm (stage 2); the proposed wind farm will not affect the lowest safe altitude (LSALT) for air routes H84, J21, J58, J114, V384, V432, W115, W142, W238, W448, W681, W723.

This development to a max height of 548.5m AHD will not impact the performance of Precision/Non-Precision Nav Aids, HF/VHF Comms, A-SMGCS, Radar, PRM or Satellite/Links.

Rontheo, further to this, please see attached guidelines to assist you in preparing future Aviation Impact Statements (AIS) which need to be submitted to Airservices before we can determine any impacts to our instrument procedures and airways facilities ie: Radars, Navaids etc.

Please contact Joe if you wish to discuss any aspect of the AIS.

Kind regards

Carly

Carly Fiumara
Airport Development Assistant
Airport Relations, Corporate & International Affairs
☏ +61 02 6268 4725
carly.fiumara@airservicesaustralia.com

APPENDIX L

LIST OF LANDOWNER TITLES

APPENDIX M

HAYES CONSENT

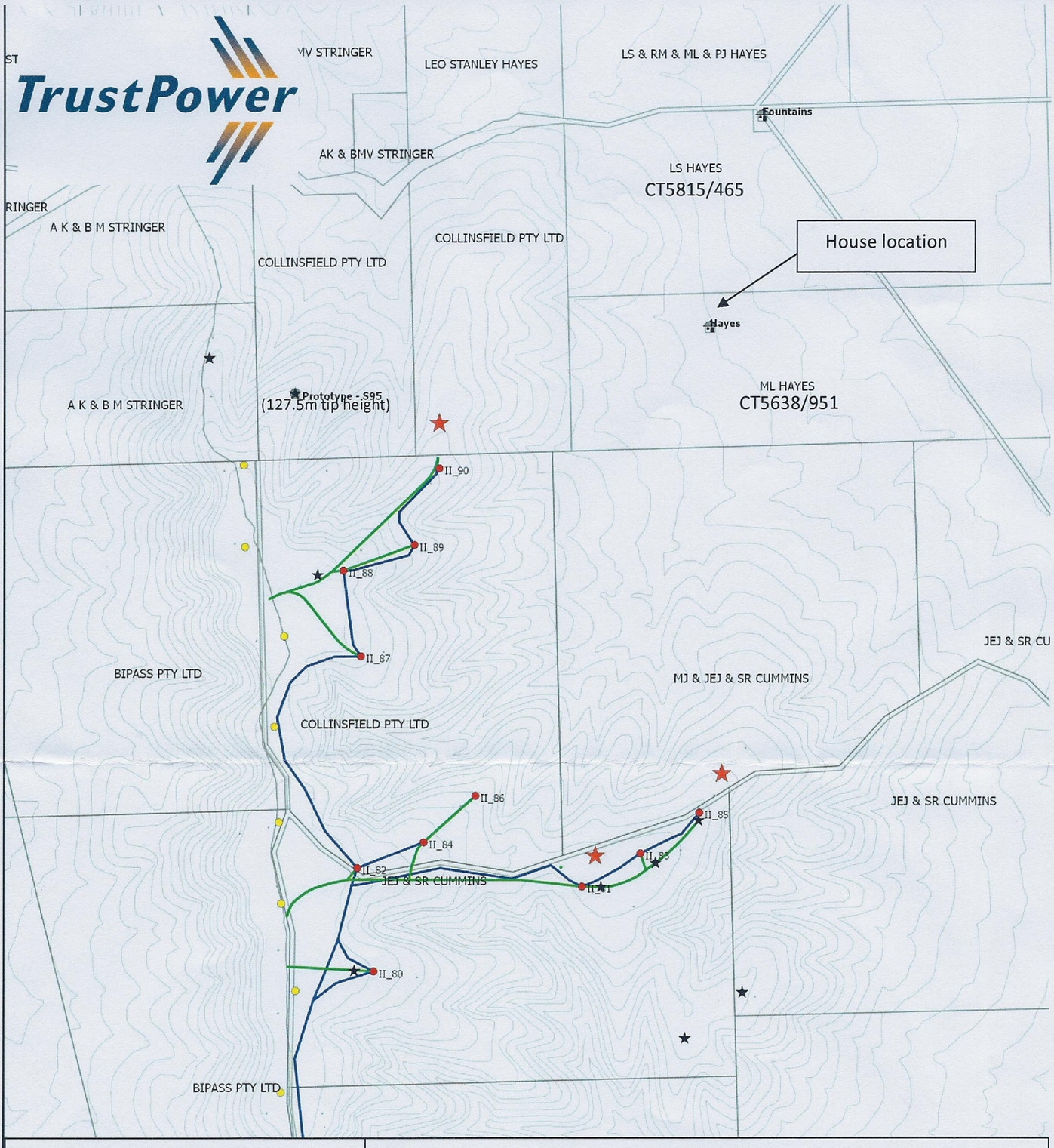

Existing St 1 turbines (124m blade tip height)

Proposed St 2 turbines (up to 133.5m blade tip height)

Original DA approved turbines

Proposed monitoring masts (lattice 80m)

Proposed St 2 access tracks

Proposed St 2 underground cable

I hereby confirm that I have no objection to the proposed Snowtown Wind Farm Stage 2 layout shown in this drawing. I further confirm that the house indicated on CT5638/951 is vacant and not suitable for occupation with no current plans to inhabit.

Leo Hayes: L. A. Hayes

(ML Hayes)

Date: 13th April '12